CITY OF HOUSTON

DEPARTMENT OF PUBLIC WORKS AND ENGINEERING
ENGINEERING AND CONSTRUCTION DIVISION

DESIGN GUIDELINE DRAWINGS
FOR SUBMERSIBLE LIFT STATION
3 PUMP SYSTEM

WBS NO. XXXXXX-XXXX-X

MAYOR
SYLVESTER TURNER

CONTROLLER
CHRIS BROWN

DISTRICT
COUNCIL MEMBERS

BRENDA STARDIG
DISTRICT A

JERRY DAVIS
DISTRICT B

ELLEN R. COHEN
DISTRICT C

DWIGHT BOYKINS
DISTRICT D

DAVID MARTIN
DISTRICT E

STEVE LE
DISTRICT F

GREG TRAVIS
DISTRICT G

KARLA CISNEROS
DISTRICT H

ROBERT GALLEGOS
DISTRICT I

MIKE LASTER
DISTRICT J

LARRY V. GREEN
DISTRICT K

COUNCIL MEMBERS
AT–LARGE

MIKE KNOX
POSITION 1

DAVID ROBINSON
POSITION 2

MICHAEL KUBOSH
POSITION 3

AMANDA EDWARDS
POSITION 4

JACK CHRISTIE
POSITION 5

GENERAL	
NO.	TITLE
–	COVER SHEET
Z0E01	ELECTRICAL SYMBOLS LEGENDS, LIGHTING FIXTURE SCHEDULES & ABBREVIATIONS
LIFT STATION ELECTRICAL PLANS	
NO.	TITLE
D1E01	CONDUIT LAYOUT FOR LIFT STATION 3 PUMP ALTERNATE HIGH PROFILE CONFIGURATION
D2E01	CONDUIT LAYOUT FOR LIFT STATION 3 PUMP PREFERRED LOW PROFILE CONFIGURATION
D3E01	CONDUIT LAYOUT FOR LIFT STATION 3 PUMP ALTERNATE LOW PROFILE CONFIGURATION
D3E02	CONDUIT LAYOUT FOR LIFT STATION 3 PUMP ALTERNATE LOW PROFILE CONFIGURATION
E1E01	CONDUIT LAYOUT FOR LIFT STATION 3 PUMP ALTERNATE HIGH PROFILE CONFIGURATION
E2E01	CONDUIT LAYOUT FOR LIFT STATION 3 PUMP PREFERRED LOW PROFILE CONFIGURATION
E3E01	CONDUIT LAYOUT FOR LIFT STATION 3 PUMP ALTERNATE LOW PROFILE CONFIGURATION
E3E02	CONDUIT LAYOUT FOR LIFT STATION 3 PUMP ALTERNATE LOW PROFILE CONFIGURATION
F1E01	CONDUIT LAYOUT FOR LIFT STATION 3 PUMP ALTERNATE HIGH PROFILE CONFIGURATION
F2E01	CONDUIT LAYOUT FOR LIFT STATION 3 PUMP PREFERRED LOW PROFILE CONFIGURATION
F3E01	CONDUIT LAYOUT FOR LIFT STATION 3 PUMP ALTERNATE LOW PROFILE CONFIGURATION
F3E02	CONDUIT LAYOUT FOR LIFT STATION 3 PUMP ALTERNATE LOW PROFILE CONFIGURATION
G1E01	CONDUIT LAYOUT FOR LIFT STATION 3 PUMP ALTERNATE HIGH PROFILE CONFIGURATION
G2E01	CONDUIT LAYOUT FOR LIFT STATION 3 PUMP PREFERRED LOW PROFILE CONFIGURATION
G3E01	CONDUIT LAYOUT FOR LIFT STATION 3 PUMP ALTERNATE LOW PROFILE CONFIGURATION
G3E02	CONDUIT LAYOUT FOR LIFT STATION 3 PUMP ALTERNATE LOW PROFILE CONFIGURATION
H1E01	CONDUIT LAYOUT FOR LIFT STATION 3 PUMP ALTERNATE HIGH PROFILE CONFIGURATION
H2E01	CONDUIT LAYOUT FOR LIFT STATION 3 PUMP PREFERRED LOW PROFILE CONFIGURATION
H3E01	CONDUIT LAYOUT FOR LIFT STATION 3 PUMP ALTERNATE LOW PROFILE CONFIGURATION
H3E02	CONDUIT LAYOUT FOR LIFT STATION 3 PUMP ALTERNATE LOW PROFILE CONFIGURATION
OUTDOOR CONFIGURATION	
NO.	TITLE
X0E01	3 PUMP OUTDOOR CONTROL CABINET ENCLOSURE
X0E02	3 PUMP OUTDOOR CONTROL CABINET EQUIPMENT LAYOUT & SCHEDULE
X0E03	3 PUMP OUTDOOR CONTROL CABINET EQUIPMENT LAYOUT
X0E04	3 PUMP OUTDOOR CONTROL CABINET EQUIPMENT LAYOUT
X0E05	3 PUMP OUTDOOR CONTROL CABINET EQUIPMENT LAYOUT
X0E06	3 PUMP OUTDOOR CONTROL PANEL POWER WIRING DIAGRAM
X0E10	3 PUMP OUTDOOR CONTROL PANEL SINGLE LINE DIAGRAM
X0E40	3 PUMP OUTDOOR PROCESS & INSTRUMENTATION DIAGRAM
X0E41	3 PUMP OUTDOOR PROCESS & INSTRUMENTATION DIAGRAM
X0E50	3 PUMP OUTDOOR CONTROL PANEL CONTROL WIRING DIAGRAM
X0E51	3 PUMP OUTDOOR CONTROL PANEL CONTROL WIRING DIAGRAM
X0E52	3 PUMP OUTDOOR CONTROL PANEL CONTROL WIRING DIAGRAM
X0E53	3 PUMP OUTDOOR CONTROL PANEL CONTROL WIRING DIAGRAM
X0E54	3 PUMP OUTDOOR PUMP 101 CONTROL WIRING DIAGRAM
X0E55	3 PUMP OUTDOOR PUMP 102 CONTROL WIRING DIAGRAM
X0E56	3 PUMP OUTDOOR PUMP 103 CONTROL WIRING DIAGRAM
INDOOR CONFIGURATION	
NO.	TITLE
Y0E21	3 PUMP INDOOR CONTROL CABINET EQUIPMENT LAYOUT & SCHEDULE
Y0E22	3 PUMP INDOOR CONTROL CABINET BACK DOOR ELEVATION
Y0E23	3 PUMP INDOOR CONTROL CABINET EQUIPMENT LAYOUT
Y0E25	3 PUMP INDOOR MCC INCOMING POWER SCHEMATIC & CONTROL POWER & COMMUNICATIONS WIRING DIAGRAM
Y0E26	3 PUMP INDOOR MCC POWER SCHEMATIC & CONTROL POWER & COMMUNICATIONS WIRING DIAGRAM
Y0E30	3 PUMP INDOOR SINGLE LINE DIAGRAM
Y0E31	3 PUMP INDOOR SINGLE LINE DIAGRAM
Y0E40	3 PUMP INDOOR PROCESS & INSTRUMENTATION DIAGRAM
Y0E41	3 PUMP INDOOR PROCESS & INSTRUMENTATION DIAGRAM
Y0E50	3 PUMP INDOOR CONTROL PANEL CONTROL WIRING DIAGRAM
Y0E51	3 PUMP INDOOR CONTROL PANEL CONTROL WIRING DIAGRAM
Y0E52	3 PUMP INDOOR CONTROL PANEL CONTROL WIRING DIAGRAM
Y0E58	3 PUMP INDOOR PUMP 101 CONTROL WIRING DIAGRAM
Y0E59	3 PUMP INDOOR PUMP 102 CONTROL WIRING DIAGRAM
Y0E60	3 PUMP INDOOR PUMP 103 CONTROL WIRING DIAGRAM
TYPICAL INSTALLATION DETAILS	
NO.	TITLE
Z0C01	SUBMERSIBLE TRANSDUCER WELL LEVEL GAUGING SYSTEM INSTALLATION & DETAILS
Z0E02	3 PUMP (INDOOR/OUTDOOR) TYPICAL JUNCTION BOX DETAILS
Z0E03	3 PUMP (INDOOR/OUTDOOR) TYPICAL ELECTRICAL DETAILS
Z0E04	3 PUMP (INDOOR/OUTDOOR) TYPICAL ELECTRICAL DETAILS
Z0E05	3 PUMP (INDOOR/OUTDOOR) CONTROL BUILDING – ELECTRICAL
Z0E06	– EXAMPLE – ELECTRICAL SITE PLAN ALTERNATE HIGH PROFILE CONFIGURATION
Z0E07	3 PUMP (INDOOR/OUTDOOR) TYPICAL ELECTRICAL DETAILS
Z0E08	3 PUMP (INDOOR/OUTDOOR) TYPICAL ELECTRICAL DETAILS
Z0E13	3 PUMP (INDOOR/OUTDOOR) MCC ELEVATIONS
Z0E21	3 PUMP (INDOOR/OUTDOOR) CONDUIT SCHEDULE FOR 480 VOLT
Z0E42	3 PUMP (INDOOR/OUTDOOR) DEVICE RATING SCHEDULE TYPICAL ELECTRICAL DETAILS

ELECTRICAL PLAN SHEET SYMBOLS

SYMBOL	DESCRIPTION
A	LIGHTING FIXTURE
A 3	BRACKET MOUNTED LIGHTING FIXTURE OR HIGH (NUMBER INDICATES LIGHTING PANEL CIRCUIT NUMBER – TYPICAL FOR ALL LIGHTING & RECEPTACLE CIRCUITS)
	SINGLE CONVENIENCE RECEPTACLE
WP	DUPLEX CONVENIENCE RECEPTACLE (WP INDICATES CAST WEATHER PROOF OUTLET BOX & COVER)
A	SINGLE SPECIAL PURPOSE RECEPTACLE (LETTER INDICATES TYPE PER SCHEDULE)
	TELEPHONE UTILITY SYSTEM OUTLET
	LIGHTING PANEL
	UTILITY METERING CABINET
	TELEPHONE UTILITY SYSTEM BACKBOARD
	DISTRIBUTION PANEL
	CABINET OR PULL BOX
	UNFUSED SAFETY SWITCH – 3P, 30A, 600V UNLESS OTHERWISE INDICATED.
30	FUSED SAFETY SWITCH – 3P, 600V, 30A MINIMUM OR AS REQUIRED TO ACCOMODATE FUSE SIZE INDICATED
	OUTLET OR JUNCTION BOX
	COMBINATION PROTECTIVE DEVICE & MAGNETIC STARTER
	SINGLE UNIT PUSHBUTTON STATION
	2–UNIT PUSHBUTTON STATION
	3–UNIT PUSHBUTTON STATION
5	ELECTRIC MOTOR – NUMBER INDICATES HORSEPOWER
FS	FLOW SWITCH
SS	"HAND–OFF–AUTOMATIC" SELECTOR SWITCH
LS	LIMIT SWITCH
DS	MAGNETIC REED DOOR SWITCH
MS	MOTION SWITCH
PS	PRESSURE SWITCH
TS	TORQUE SWITCH
PE	PNUEMATIC/ELECTRIC SWITCH
PLS	PROXIMITY LIMIT SWITCH
VS	VACUUM SWITCH

SYMBOL	DESCRIPTION
FS	FLOAT SWITCH
EP	ELECTRO–PNEUMATIC VALVE
S	SOLENOID VALVE
T	ELECTRIC THERMOSTAT
T	TEMPERATURE ACTUATED DEVICE
$ 1	SINGLE POLE TOGGLE SWITCH
$ 2	DOUBLE POLE TOGGLE SWITCH
$ 3	3 – WAY SWITCH
$ T	MANUAL MOTOR STARTER WITH THERMAL ELEMENT
$ M	MOTOR RATED SWITCH WITH THERMAL ELEMENT IN NEMA 4X SS ENCLOSURE
B	BATTERY POWERED EMERGENCY LIGHTING FIXTURE
	UNIT HEATER
	CLASS 1, DIV I, CONDUIT SEAL
	EXPOSED CONDUIT
	EXPOSED PUMP CABLE
	FIELD/GROUND LOOP CONDUCTORS
	CONDUIT CONCEALED IN FLOOR SLAB OR UNDER FLOOR SLAB. (CONDUITS 1–1/2" OR LARGER SHALL BE INSTALLED UNDER FLOOR SLAB). CONDUITS RUN UNDER FLOOR SLAB SHALL BE ENCASED IN CONCRETE. SEE NOTE 2
	HOMERUN TO PANEL OR MCC AS NOTED
A EQ	CONCRETE ENCASED DUCTBANK (SECTION INDICATES CONDUIT CONFIGURATION & DESIGNATIONS)
A EQ	EXPOSED CONDUIT BANK
	AIR TERMINAL
	GROUND ROD & WELL
K	KIRK KEY

CONDUIT SYSTEM NOTES

1. ANY CONDUIT WITHOUT FURTHER DESIGNATION INDICATES 2 #12 IN 3/4" CONDUIT. GREATER NUMBER OF WIRES ARE INDICATED AS FOLLOWS. (3 WIRES) (4 WIRES) ETC. LONGER HASHMARK INDICATES NEUTRAL CONDUCTOR, LONGER HASHMARK WITH DOT INDICATES GROUND CONDUCTOR. NO. INDICATES WIRE SIZE WHEN OTHER THAN #12 AWG.
2. CONDUITS IMBEDDED IN STRUCTURAL CONCRETE (FLOOR SLABS, ETC.) SHALL BE SO LOCATED AS NOT TO UNDULY IMPAIR THE STRENGTH OF THE CONSTRUCTION AND SHALL BE SPACED NOT LESS THAN TWO TIMES THE CONDUIT OD BETWEEN ADJACENT CONDUITS EXCEPT WHERE CROSSING OR OTHERWISE APPROVED BY THE ENGINEER.
3. WIRING FOR LIGHTING, RECEPTACLES AND OTHER MISCELLANEOUS CIRCUITS SHALL CONFORM TO THE CIRCUITING INDICATED ON THE DRAWINGS WITH ARRANGEMENT AND ROUTING AS REQUIRED. THE WIRING SHALL BE SO ARRANGED THAT NO MORE THAN 6 CURRENT CARRYING CONDUCTORS SHALL BE INSTALLED PER CONDUIT AND CIRCUITS OF DIFFERENT PANELS SHALL BE INSTALLED IN SEPARATE RACEWAYS.

WIRING DIAGRAM SYMBOLS

SYMBOL	DESCRIPTION
	CONTACT, NORMALLY OPEN
	CONTACT, NORMALLY CLOSED
	PUSHBUTTON, NORMALLY CLOSED
	PUSHBUTTON, NORMALLY OPEN
	SELECTOR SWITCH
OLS X2	OVERLOADS
	FUSE
G	PILOT LIGHT, PUSH TO TEST
M	AUXILIARY STARTER CONTACTS
	PRESSURE SWITCH, OPENS ON RISE
	PRESSURE SWITCH, CLOSES ON RISE
	LEVEL OR LEAK DETECTION SWITCH
	LIMIT SWITCH, NORMALLY CLOSED
	LIMIT SWITCH, NORMALLY OPEN
	LIMIT SWITCH, NORMALLY OPEN, HELD CLOSED
	LIMIT SWITCH, NORMALLY CLOSED, HELD OPEN
	TEMPERATURE ACTUATED SWITCH, OPENS ON RISE
	TEMPERATURE ACTUATED SWITCH, CLOSES ON RISE
	VACUUM SWITCH, OPENS ON RISE
	VACUUM SWITCH, CLOSES ON RISE
	THERMAL OVERLOAD
	SOLID STATE MOTOR PROTECTION RELAY (MPR)
	SPACE HEATER
	GROUND CONNECTION
	SOLENOID
G M	MOTORIZED TIME DELAY RELAY
TD	TIME DELAY RELAY
TD O–O–X	TIME DELAY CONTACT (O=OPEN, X=CLOSED, DESIGNATION INDICATES CONTACT POSITION WHEN RELAY IS RESET–TIMING–TIMED OUT)
R	AUXILIARY RELAY
	CONTROL POWER TRANSFORMER
M	MOTOR STARTER OPERATING COIL

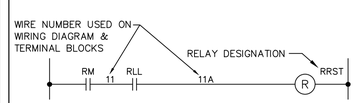

INSTRUMENTATION SYSTEM SYMBOLS

SYMBOL	DESCRIPTION
	MECHANICAL/ELECTRICAL LINK
	ELECTRICAL SIGNAL CONNECTION TO PIPING
	DISCRETE FIELD MOUNTED INSTRUMENT
	INTERNAL OR INACCESSIBLE DISCRETE DEVICE
	PANEL MOUNTED DISCRETE DEVICE
	PLC INPUT/OUTPUT
	CHECK VALVE
	ISOLATION VALVE
	SERIAL INPUT
R	RELAY

IDENTIFICATION LETTERS

	FIRST LETTER	SECCEEDING LETTERS		
	MEASURED OR INITIATING VARIABLE	READOUT OR PASSIVE FUNCTION	OUTPUT FUNCTION	MODIFIER
A	NOT USED	ALARM		
E	NOT USED	SENSOR (PRIMARY ELEMENT)		
H	HAND			HIGH
I	CURRENT (ELEC)	INDICATE		
J	POWER			
L	LEVEL			LOW
R	NOT USED	RECORD		
S	NOT USED		SWITCH	
Y	EVENT, STATE OR PRESENCE		RELAY, COMPUTE, CONVERT	
Z	POSITION, DIMENSION			

SINGLE LINE DIAGRAM SYMBOLS

SYMBOL	DESCRIPTION
	SEPARABLE CONTACTS
	CIRCUIT BREAKER
	COMBINATION MOTOR STARTER
V	VOLTMETER
VS	VOLTMETER SWITCH
300:5	CURRENT TRANSFORMER (CT) DESIGNATION INDICATES QUANTITY & RATIO
	POTENTIAL TRANSFORMER
	LIGHTING TRANSFORMER
	POWER FACTOR CORRECTION CAPACITOR
47	PHASE FAILURE/UNDERVOLTAGE MONITOR RELAY
	FUSE
	MOTOR OVERLOAD
	SOLID STATE OVERLOAD
	FUSED DISCONNECT SWITCH
	SURGE ARRESTOR
VFD	VARIBLE FREQUENCY DRIVE

ABBREVIATIONS

A	AMP	nA	NANOAMPERE
ADJ	ADJUSTABLE	N.C.	NORMALLY CLOSED
AFF	ABOVE FINISHED FLOOR	NEC	NATIONAL ELECTRICAL CODE
AI	ANALOG INPUT	NEUT	NEUTRAL
ALT	ALTERNATOR	N.O.	NORMALLY OPEN
AO	ANALOG OUTPUT	OL	OVERLOAD
AT&T	AT&T TELEPHONE	P	POLE
C	CONDUIT	PLC	PROGRAMMABLE LOGIC CONTROLLER
CA	CABLE	POS	POSITION
CAB	CABINET	PS	PRESSURE SWITCH
CAT.	CATALOG	PVC	POLYVINYL CHLORIDE
CB	CIRCUIT BREAKER	PVC RGS	PVC COATED RIGID GALV CONDUIT
CKT	CIRCUIT	PWR	POWER
COMM	COMMUNICATIONS	R	RELAY
CONT	CONTINUED	RALM	PUMP ALARM RELAY
CPT–N	CONTROL POWER TRANSFORMER NEUTRAL	RGS	RIGID GALVANIZED CONDUIT
CPU	CENTRAL PROCESSING UNIT	RHLA	HIGH LEVEL ALARM RELAY
CT	CURRENT TRANSFORMER	RM	PUMP RUN AUX RELAY
CU	COPPER	RMOR	MOTOR OVERLOAD AUX RELAY
CW	COOL WHITE	RMTH	MOTOR TEMPERATURE RELAY
DI	DISCRETE INPUT	RPLC	PLC MODE AUX RELAY
DIREC	DIRECTIONAL	RPLCOR	PLC OVERRIDE
DIV	DIVISION	RPLM	PLC PUMP RUN RELAY
DN	DOWN	RPLMP	BACKUP SYSTEM RUN RELAY
DO	DISCRETE OUTPUT	RR	RUN RELAY
ETM	ELAPSED TIME METER	RRST	PUMP RESET AUX RELAY
G.E.	GENERAL ELECTRIC	RRST5	MODEM RESET RELAY
GFI	GROUND FAULT INTERRUPT	RTAH	TEMPERATURE ALARM AUX RELAY
GND	GROUND	RWD	WATCHDOG RELAY
H–O–A	HAND OFF AUTO	SEC	SECONDS
INC	INCANDESCENT	SL	SEAL LEAK SWITCH
JB	JUNCTION BOX	SN	SOLID NEUTRAL
KA SYM	THOUSAND AMPS SYMMETRICAL	SSOL	SOLID STATE OVERLOAD
KS	KEY SWITCH	SP	SURGE PROTECTOR
KVA	KILO–VOLT–AMPS	SPD	SURGE PROTECTION DEVICE
L	LINE	SPST	SINGLE POLE SINGLE THROW
LED	LIGHT EMITTING DIODE	SS	STAINLESS STEEL
LOS	LOCK OUT STOP	S.S.	SELECTOR SWITCH
LS	LIMIT SWITCH	SW	SWITCH
LV	LOW VOLTAGE	TEMP	TEMPERATURE
LVN	LOW VOLTAGE NEUTRAL	TD	TIME DELAY RELAY
M	MOTOR RUN CONTACT	TDLP	LOSS OF POWER TIME DELAY RELAY
mA	MILLIAMPERE	TDRM	PUMP TIME DELAY RELAY
MA	MILLIAMPERE	UPS	UNINTERRUPTIBLE POWER SUPPLY
MADC	MILLIAMPERE DIRECT CURRENT	V	VOLTS
MCC	MOTOR CONTROL CENTER	VA	VOLT–AMP
MCP	MOTOR CIRCUIT PROTECTOR	VAC	VOLTS ALTERNATING CURRENT
MIN.	MINUTES	VDC	VOLTS DIRECT CURRENT
MOR	MOTOR OVERLOAD RELAY	W	WATT OR WIRE
MPR	MOTOR PROTECTION RELAY	WM	WATT MISER (HIGH EFFICIENCY LAMP)
MS	MOTION SWITCH		
mS	MILLISECOND		
MTH	MOTOR TEMPERATURE SWITCH		
MTS	MANUAL TRANSFER SWITCH		
N	NEUTRAL		

LIGHTING FIXTURE SCHEDULE

TYPE	MFG & CATALOG NO.	LAMP SIZE	MOUNTING	REMARKS
LED A	LITHONIA ZL2N–L48–5000LM–MDD–MVOLT–50K–8CR1WH OR APPROVED EQUAL	4' LED	PENDANT MOUNT 9'–6" AFF	4' PENDENT OR SURFACE MOUNTED
LED B	LITHONIA ZL2N–L24–200LM–MDD–MVOLT–40K–8CR1WH 120V OR EQUAL	2' LED	SURFACE	FIXTURE MOUNTED IN CONTROL PANEL
B	LITHONIA D5XW1 530MA DRIVER 120V OR EQUAL	36W LED	WALL MOUNT 12" ABOVE DOOR FRAME	VANDAL RESISTANT LEXAN REFRACTOR & PHOTOCELL
C	EDWARDS SIGNAL ALARM BEACON	13W LED	STEM MOUNTED	RED POLYCARBONATE LENS SUITABLE FOR WET LOCATIONS – 120V, SERIES 105 XBR
D	LITHONIA C5X1FT 530MA DRIVER 120V OR EQUAL	51W COATED LED	POLE MOUNT	WITH 120 VOLT DRIVER AND PHOTOCELL TYPE III FORWARD THRO

EMERGENCY LIGHTING FIXTURE SCHEDULE

TYPE	MFG & CATALOG NO.	DESCRIPTION
	KENALL HL SERIES OR APPROVED EQUAL	TWO 4.5W LED LAMPS. 8W NICKEL CADIUM BATTERY, 120V OPERATION RATED TO SUPPORT 4 LAMPS FOR 1 1/2 HOURS. PROVIDE MOUNTING HARDWARE AS REQ'D.
	KENALL HL SERIES OR APPROVED EQUAL	REMOTE SINGLE LAMP 4.5W LED LAMP IN THERMOPLASTIC HOUSING COMPLETE WITH SWIVEL MOUNT, MOUNTING BOX AND HARDWARE

NOTES TO DESIGN ENGINEER:

A. THESE LIFT STATION DRAWINGS ARE CONSIDERED TO BE DESIGN GUIDELINES FOR THE CONSTRUCTION OF CITY OF HOUSTON WASTEWATER SUBMERSIBLE LIFT STATIONS. THEIR INTENDED USE IS AS A FRAMEWORK FOR THE CONTRACTED DESIGN ENGINEER IN DEVELOPING SPECIFIC LIFT STATION DESIGNS.

IT IS THE RESPONSIBILITY OF THE CONTRACTED DESIGN ENGINEER TO VERIFY THE COMPLETENESS AND ACCURACY OF THE INFORMATION HEREIN CONTAINED AND TO ADJUST ACCORDING TO PROJECT SPECIFIC REQUIREMENTS.

B. THE DESIGN ENGINEER SHALL INCORPORATE ONLY THE NECESSARY STANDARD GUIDELINE DRAWINGS AND DETAILS INTO HIS PROJECT CONTRACT DOCUMENTATION PACKAGE, AND SHALL ADJUST PAGE NUMBERS AND CROSS REFERENCING ACCORDINGLY.

C. THE DESIGN ENGINEER SHALL CONSULT THE CITY OF HOUSTON DESIGN GUIDELINES MANUAL, THE ENGINEERING DESIGN MANUAL, AND THE MASTER SPECIFICATIONS FOR FURTHER INSTRUCTIONS AND INFORMATION PERTINENT TO THESE STANDARD DESIGN GUIDELINE DRAWINGS.

D. THE DESIGN ENGINEER SHALL REMOVE THESE NOTES, ALL REFERENCES TO THESE NOTES, AND ANY OTHER EXTRANEOUS INFORMATION FROM THE DESIGN GUIDELINE DRAWINGS. DESIGN ENGINEER SHALL PROVIDE ANY NOTES OR OTHER APPROPRIATE INFORMATION NECESSARY TO COMPLETE THE LIFT STATION DESIGN.

ELECTRICAL SYMBOLS LEGENDS, LIGHTING FIXTURE SCHEDULES & ABBREVIATIONS

PROJECT NO. R–000265–0XXX–X

TITLE CITY OF HOUSTON DESIGN GUIDELINE DRAWINGS FOR SUBMERSIBLE LIFT STATIONS

CITY OF HOUSTON
DEPARTMENT OF PUBLIC WORKS AND ENGINEERING
ENGINEERING AND CONSTRUCTION

DESIGN ENGINEER TO INCLUDE COH STANDARD TITLE BLOCK ON ALL DRAWINGS, SEE STANDARD TITLE BLOCK DETAIL ON SHEET ZOC0X

REV. NO.	DESCRIPTION	APP'D	DATE

SCALE: NONE
DESIGNED BY:
DRAWN BY:
SUBMITTED:
DATE:
SURVEY BY:
FIELD BOOK NO.
SHEET NO. OF SHEETS
DWG. NO. ZOE01–0516

CADD DWG. FILE NO. : ZOE01.DWG

COHSTD.BDR

0 1 2 3 ORIGINAL SCALE IN INCHES FOR REDUCED PLANS

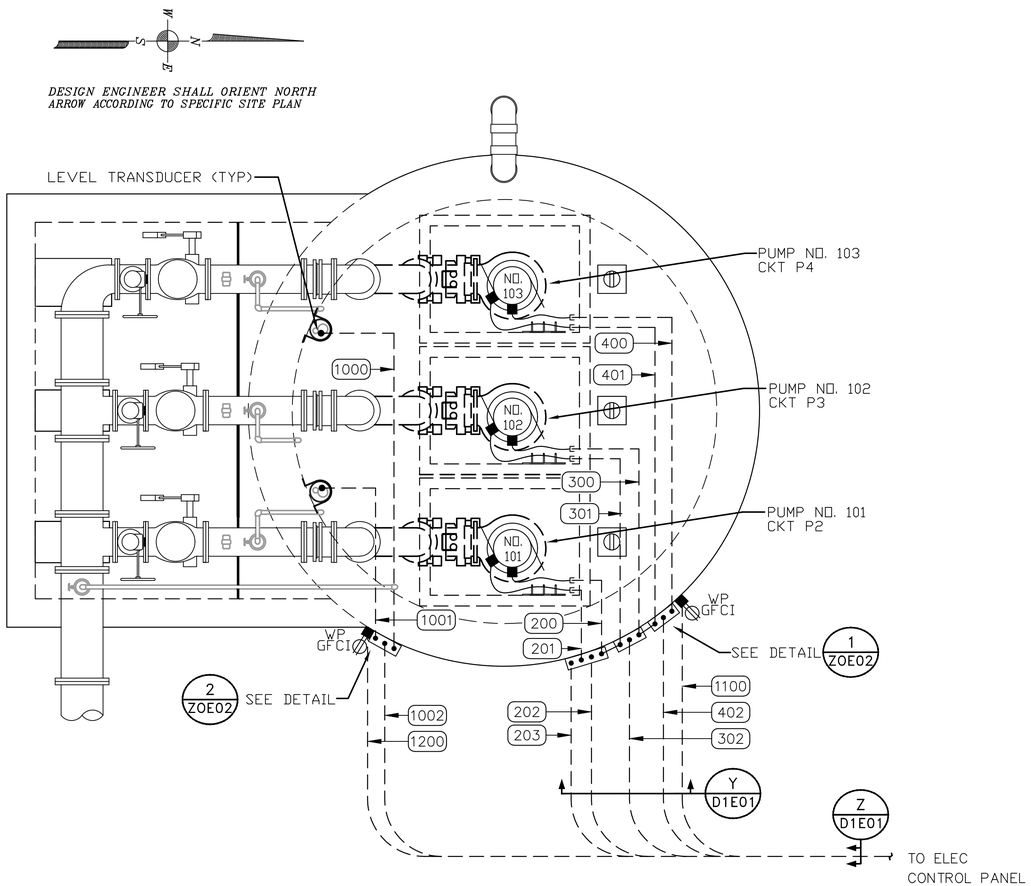

LIFT STATION PLAN

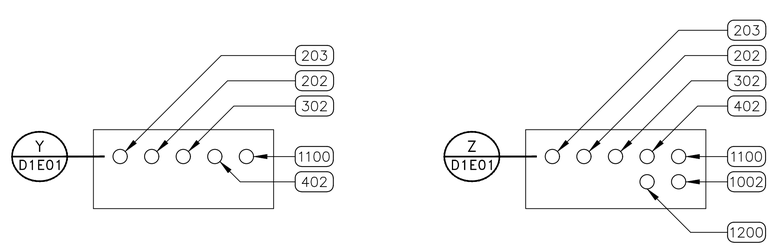

DUCTBANK SECTIONS

NOTES TO DESIGN ENGINEER:

A. THESE LIFT STATION DRAWINGS ARE CONSIDERED TO BE DESIGN GUIDELINES FOR THE CONSTRUCTION OF CITY OF HOUSTON WASTEWATER SUBMERSIBLE LIFT STATIONS. THEIR INTENDED USE IS AS A FRAMEWORK FOR THE CONTRACTED DESIGN ENGINEER IN DEVELOPING SPECIFIC LIFT STATION DESIGNS.

IT IS THE RESPONSIBILITY OF THE CONTRACTED DESIGN ENGINEER TO VERIFY THE COMPLETENESS AND ACCURACY OF THE INFORMATION HEREIN CONTAINED AND TO ADJUST ACCORDING TO PROJECT SPECIFIC REQUIREMENTS.

B. THE DESIGN ENGINEER SHALL INCORPORATE ONLY THE NECESSARY STANDARD GUIDELINE DRAWINGS AND DETAILS INTO HIS PROJECT CONTRACT DOCUMENTATION PACKAGE, AND SHALL ADJUST PAGE NUMBERS AND CROSS REFERENCING ACCORDINGLY.

C. THE DESIGN ENGINEER SHALL CONSULT THE CITY OF HOUSTON DESIGN GUIDELINES MANUAL, THE ENGINEERING DESIGN MANUAL, AND THE MASTER SPECIFICATIONS FOR FURTHER INSTRUCTIONS AND INFORMATION PERTINENT TO THESE STANDARD DESIGN GUIDELINE DRAWINGS.

D. THE DESIGN ENGINEER SHALL REMOVE THESE NOTES, ALL REFERENCES TO THESE NOTES, AND ANY OTHER EXTRANEOUS INFORMATION FROM THE DESIGN GUIDELINE DRAWINGS. DESIGN ENGINEER SHALL PROVIDE ANY NOTES OR OTHER APPROPRIATE INFORMATION NECESSARY TO COMPLETE THE LIFT STATION DESIGN.

NOTES:

1. GROUNDING SHALL BE PER N.E.C. MINIMIUM REQUIREMENTS.
2. THE ELECTRICAL INSTALLATION WITHIN THE WET WELL SHALL BE EXPLOSION PROOF IN ACCORDANCE WITH ARTICLE 510 OF THE NEC FOR CLASS I, DIVISION 1, GROUP C & D.
3. WHERE JUNCTION BOXES ARE SHOWN, THEY SHALL BE USED FOR PULLING OR TERMINATION PURPOSES ONLY. SPLICES WILL NOT BE ALLOWED EXCEPT AS PROVIDED BY NOTE 4 AND AT LIGHTING AND RECEPTACLE TERMINATIONS.
4. FOR MOTOR FEEDER AND CONTROL CABLES, INSTALL TYPE CSBE CABLE SEALING FITTING AT JUNCTION BOX ENTRANCE AND EXPLOSION PROOF SEAL IN CONDUITS TO CONTROL BUILDING OR PANEL.
5. TERMINATE PUMP POWER & CONTROL CONDUITS WITH CSBE SEAL. ATTACH STAINLESS STEEL SPLIT SLEEVE CABLE SUPPORT ON EACH POWER AND CONTROL CABLE.
6. ALL PUMP POWER AND CONTROL CABLE LEADS MUST BE THE SAME LENGTH REGARDLESS OF PUMP LOCATION FROM TERMINAL/JUNCTION BOX.
7. LEVEL TRANSMITTERS SHOWN IN APPROXIMATE LOCATION ACTUAL LOCATION SHALL BE OPPOSITE SIDE OF INLET PIPE.

CONDUIT LAYOUT FOR LIFT STATION
3 PUMP
ALTERNATE HIGH PROFILE CONFIGURATION

PROJECT NO.
R-000265-0XXX-X

TITLE
CITY OF HOUSTON
DESIGN GUIDELINE DRAWINGS
FOR SUBMERSIBLE LIFT STATIONS

CITY OF HOUSTON
DEPARTMENT OF PUBLIC WORKS AND ENGINEERING
ENGINEERING AND CONSTRUCTION

DESIGN ENGINEER TO INCLUDE COH STANDARD TITLE BLOCK ON ALL DRAWINGS, SEE STANDARD TITLE BLOCK DETAIL ON SHEET ZOCOX

REV. NO.	DESCRIPTION	APP'D	DATE

SCALE: XX" = 1'-0"
SUBMITTED:
DATE:
SURVEY BY:
FIELD BOOK NO.
DESIGNED BY:
DRAWN BY:
SHEET NO. OF SHEETS
DWG. NO.
D1E01-0516

CADD DWG. FILE NO. :
D1E01-3P.DWG

COHSTD.BDR

0 1 2 3 ORIGINAL SCALE IN INCHES FOR REDUCED PLANS

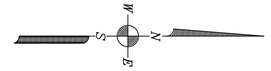

DESIGN ENGINEER SHALL ORIENT NORTH ARROW ACCORDING TO SPECIFIC SITE PLAN

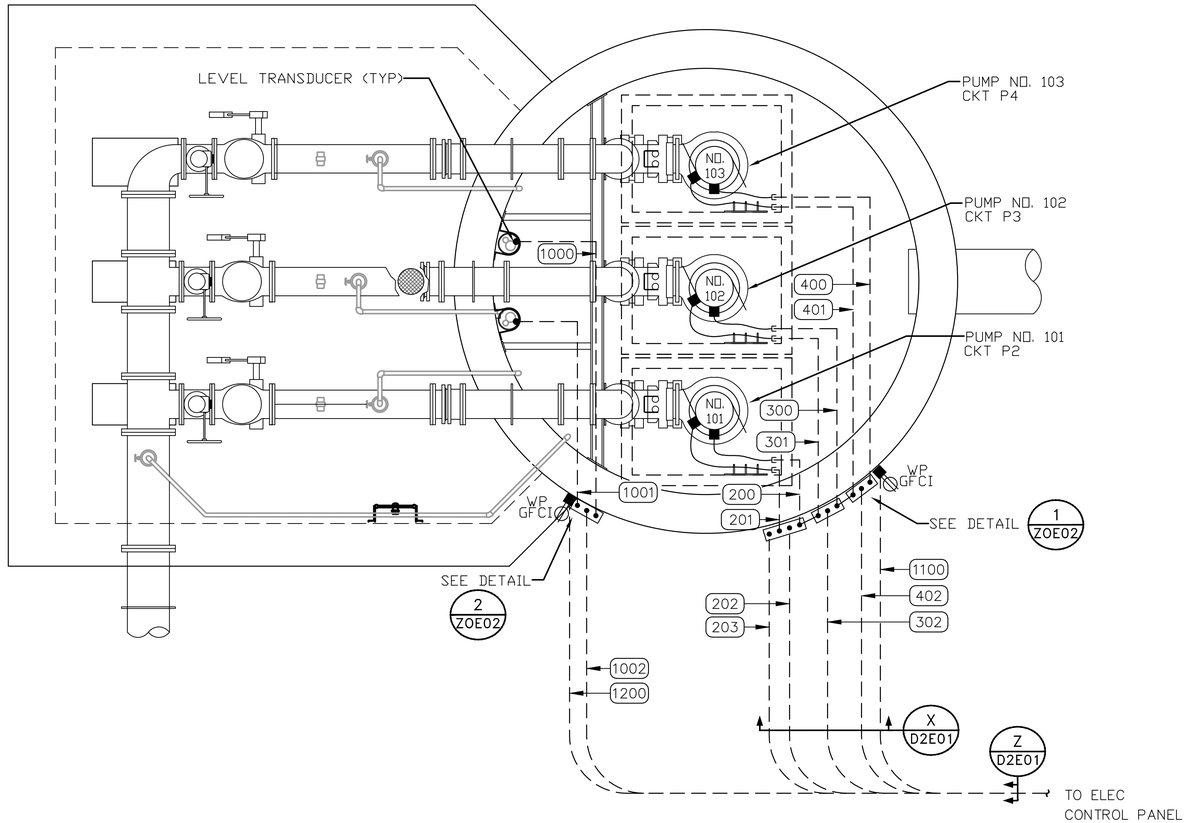

LIFT STATION PLAN

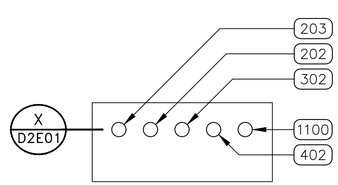

DUCTBANK SECTIONS

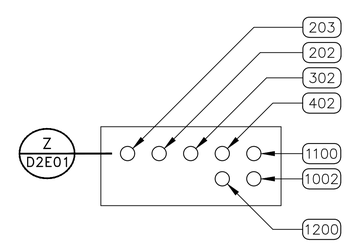

NOTES TO DESIGN ENGINEER:

A. THESE LIFT STATION DRAWINGS ARE CONSIDERED TO BE DESIGN GUIDELINES FOR THE CONSTRUCTION OF CITY OF HOUSTON WASTEWATER SUBMERSIBLE LIFT STATIONS. THEIR INTENDED USE IS AS A FRAMEWORK FOR THE CONTRACTED DESIGN ENGINEER IN DEVELOPING SPECIFIC LIFT STATION DESIGNS.

IT IS THE RESPONSIBILITY OF THE CONTRACTED DESIGN ENGINEER TO VERIFY THE COMPLETENESS AND ACCURACY OF THE INFORMATION HEREIN CONTAINED AND TO ADJUST ACCORDING TO PROJECT SPECIFIC REQUIREMENTS.

B. THE DESIGN ENGINEER SHALL INCORPORATE ONLY THE NECESSARY STANDARD GUIDELINE DRAWINGS AND DETAILS INTO HIS PROJECT CONTRACT DOCUMENTATION PACKAGE, AND SHALL ADJUST PAGE NUMBERS AND CROSS REFERENCING ACCORDINGLY.

C. THE DESIGN ENGINEER SHALL CONSULT THE CITY OF HOUSTON DESIGN GUIDELINES MANUAL, THE ENGINEERING DESIGN MANUAL, AND THE MASTER SPECIFICATIONS FOR FURTHER INSTRUCTIONS AND INFORMATION PERTINENT TO THESE STANDARD DESIGN GUIDELINE DRAWINGS.

D. THE DESIGN ENGINEER SHALL REMOVE THESE NOTES, ALL REFERENCES TO THESE NOTES, AND ANY OTHER EXTRANEOUS INFORMATION FROM THE DESIGN GUIDELINE DRAWINGS. DESIGN ENGINEER SHALL PROVIDE ANY NOTES OR OTHER APPROPRIATE INFORMATION NECESSARY TO COMPLETE THE LIFT STATION DESIGN.

NOTES:

1. GROUNDING SHALL BE PER N.E.C. MINIMIUM REQUIREMENTS.
2. THE ELECTRICAL INSTALLATION WITHIN THE WET WELL SHALL BE EXPLOSION PROOF IN ACCORDANCE WITH ARTICLE 510 OF THE NEC FOR CLASS I, DIVISION 1, GROUP C & D.
3. WHERE JUNCTION BOXES ARE SHOWN, THEY SHALL BE USED FOR PULLING OR TERMINATION PURPOSES ONLY. SPLICES WILL NOT BE ALLOWED EXCEPT AS PROVIDED BY NOTE 4 AND AT LIGHTING AND RECEPTACLE TERMINATIONS.
4. FOR MOTOR FEEDER AND CONTROL CABLES, INSTALL TYPE CSBE CABLE SEALING FITTING AT JUNCTION BOX ENTRANCE AND EXPLOSION PROOF SEAL IN CONDUITS TO CONTROL BUILDING OR PANEL.
5. TERMINATE PUMP POWER & CONTROL CONDUITS WITH CSBE SEAL. ATTACH STAINLESS STEEL SPLIT SLEEVE CABLE SUPPORT ON EACH POWER AND CONTROL CABLE.
6. ALL PUMP POWER AND CONTROL CABLE LEADS MUST BE THE SAME LENGTH REGARDLESS OF PUMP LOCATION FROM TERMINAL/JUNCTION BOX.
7. LEVEL TRANSMITTERS SHOWN IN APPROXIMATE LOCATION ACTUAL LOCATION SHALL BE OPPOSITE SIDE OF INLET PIPE.

CONDUIT LAYOUT FOR LIFT STATION
3 PUMP
PREFERRED LOW PROFILE CONFIGURATION

PROJECT NO.
R-000265-0XXX-X

TITLE
CITY OF HOUSTON
DESIGN GUIDELINE DRAWINGS
FOR SUBMERSIBLE LIFT STATIONS

CITY OF HOUSTON
DEPARTMENT OF PUBLIC WORKS AND ENGINEERING
ENGINEERING AND CONSTRUCTION

DESIGN ENGINEER TO INCLUDE COH STANDARD TITLE BLOCK ON ALL DRAWINGS, SEE STANDARD TITLE BLOCK DETAIL ON SHEET ZOCOX

REV. NO.	DESCRIPTION	APP'D	DATE

SCALE: XX" = 1'-0"
SUBMITTED:
DATE:
SURVEY BY:
FIELD BOOK NO.
DESIGNED BY:
DRAWN BY:
SHEET NO. OF SHEETS
DWG. NO.
D2E01-0516

CADD DWG. FILE NO. :
D2E01-3P.DWG

COHSTD.BDR

0 1 2 3 ORIGINAL SCALE IN INCHES FOR REDUCED PLANS

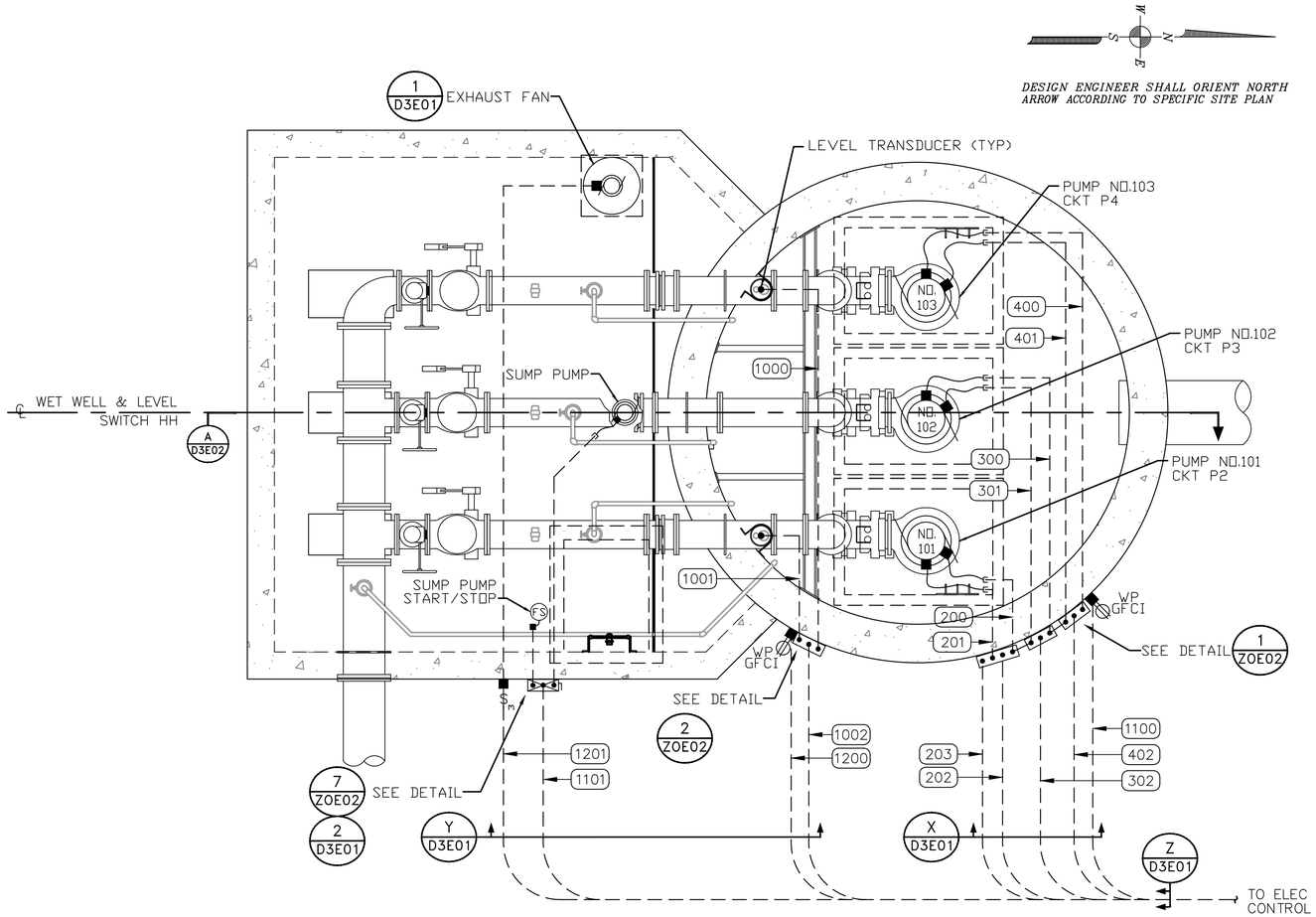

LIFT STATION PLAN

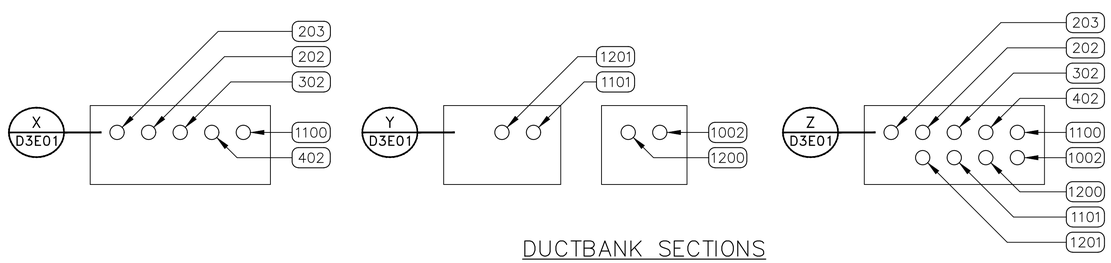

DUCTBANK SECTIONS

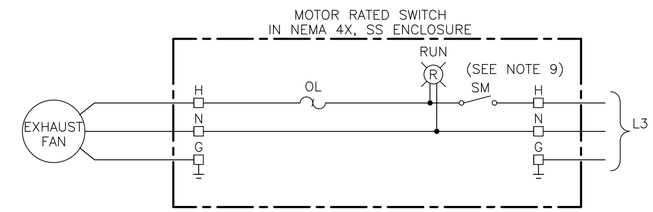

EXHAUST FAN

SCHEMATIC 1 D3E01
(SEE NOTE 9)

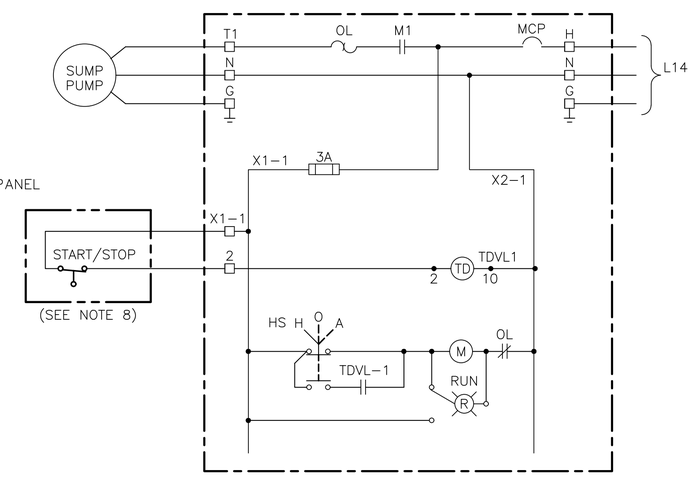

NEMA 4X SS COMBINATION MOTOR STARTER
SIZE 1, 120V, 1PH-3W

SUMP PUMP

SCHEMATIC 2 D3E01

NOTES TO DESIGN ENGINEER:

A. THESE LIFT STATION DRAWINGS ARE CONSIDERED TO BE DESIGN GUIDELINES FOR THE CONSTRUCTION OF CITY OF HOUSTON WASTEWATER SUBMERSIBLE LIFT STATIONS. THEIR INTENDED USE IS AS A FRAMEWORK FOR THE CONTRACTED DESIGN ENGINEER IN DEVELOPING SPECIFIC LIFT STATION DESIGNS.

IT IS THE RESPONSIBILITY OF THE CONTRACTED DESIGN ENGINEER TO VERIFY THE COMPLETENESS AND ACCURACY OF THE INFORMATION HEREIN CONTAINED AND TO ADJUST ACCORDING TO PROJECT SPECIFIC REQUIREMENTS.

B. THE DESIGN ENGINEER SHALL INCORPORATE ONLY THE NECESSARY STANDARD GUIDELINE DRAWINGS AND DETAILS INTO HIS PROJECT CONTRACT DOCUMENTATION PACKAGE, AND SHALL ADJUST PAGE NUMBERS AND CROSS REFERENCING ACCORDINGLY.

C. THE DESIGN ENGINEER SHALL CONSULT THE CITY OF HOUSTON DESIGN GUIDELINES MANUAL, THE ENGINEERING DESIGN MANUAL, AND THE MASTER SPECIFICATIONS FOR FURTHER INSTRUCTIONS AND INFORMATION PERTINENT TO THESE STANDARD DESIGN GUIDELINE DRAWINGS.

D. THE DESIGN ENGINEER SHALL REMOVE THESE NOTES, ALL REFERENCES TO THESE NOTES, AND ANY OTHER EXTRANEOUS INFORMATION FROM THE DESIGN GUIDELINE DRAWINGS. DESIGN ENGINEER SHALL PROVIDE ANY NOTES OR OTHER APPROPRIATE INFORMATION NECESSARY TO COMPLETE THE LIFT STATION DESIGN.

NOTES:

1. GROUNDING SHALL BE PER N.E.C. MINIMIUM REQUIREMENTS.
2. THE ELECTRICAL INSTALLATION WITHIN THE WET WELL SHALL BE EXPLOSION PROOF IN ACCORDANCE WITH ARTICLE 510 OF THE NEC FOR CLASS I, DIVISION 1, GROUP C & D.
3. WHERE JUNCTION BOXES ARE SHOWN, THEY SHALL BE USED FOR PULLING OR TERMINATION PURPOSES ONLY. SPLICES WILL NOT BE ALLOWED EXCEPT AS PROVIDED BY NOTE 4 AND AT LIGHTING AND RECEPTACLE TERMINATIONS.
4. FOR MOTOR FEEDER AND CONTROL CABLES, INSTALL TYPE CSBE CABLE SEALING FITTING AT JUNCTION BOX ENTRANCE AND EXPLOSION PROOF SEAL IN CONDUITS TO CONTROL BUILDING OR PANEL.
5. TERMINATE PUMP POWER & CONTROL CONDUITS WITH CSBE SEAL. ATTACH STAINLESS STEEL SPLIT SLEEVE CABLE SUPPORT ON EACH POWER AND CONTROL CABLE.
6. ALL PUMP POWER AND CONTROL CABLE LEADS MUST BE THE SAME LENGTH REGARDLESS OF PUMP LOCATION FROM TERMINAL/JUNCTION BOX.
7. LEVEL TRANSMITTERS SHOWN IN APPROXIMATE LOCATION ACTUAL LOCATION SHALL BE OPPOSITE SIDE OF INLET PIPE.
8. FLOAT SWITCH WITH CABLE LENGTH SHALL BE AS REQUIREDTO PROVIDE CONTINUIOUS RUN TO MOTOR STARTER.
9. MOTOR RATED SWITCH SIZE SHALL BE PER NAMEPLATE RATING OF MOTOR.

CONDUIT LAYOUT FOR LIFT STATION
3 PUMP
ALTERNATE LOW PROFILE CONFIGURATION

PROJECT NO. R-000265-0XXX-X

TITLE CITY OF HOUSTON
DESIGN GUIDELINE DRAWINGS
FOR SUBMERSIBLE LIFT STATIONS

CITY OF HOUSTON
DEPARTMENT OF PUBLIC WORKS AND ENGINEERING
ENGINEERING AND CONSTRUCTION

DESIGN ENGINEER TO INCLUDE COH STANDARD TITLE BLOCK ON ALL DRAWINGS, SEE STANDARD TITLE BLOCK DETAIL ON SHEET ZOCOX

REV. NO.	DESCRIPTION	APP'D	DATE

SCALE: XX" = 1'-0"
SUBMITTED:
DATE:
SURVEY BY:
FIELD BOOK NO.
DESIGNED BY:
DRAWN BY:
SHEET NO. OF SHEETS
DWG. NO. D3E01-0516

CADD DWG. FILE NO. : D3E01-3P.DWG

COHSTD.BDR

0 1 2 3 ORIGINAL SCALE IN INCHES FOR REDUCED PLANS

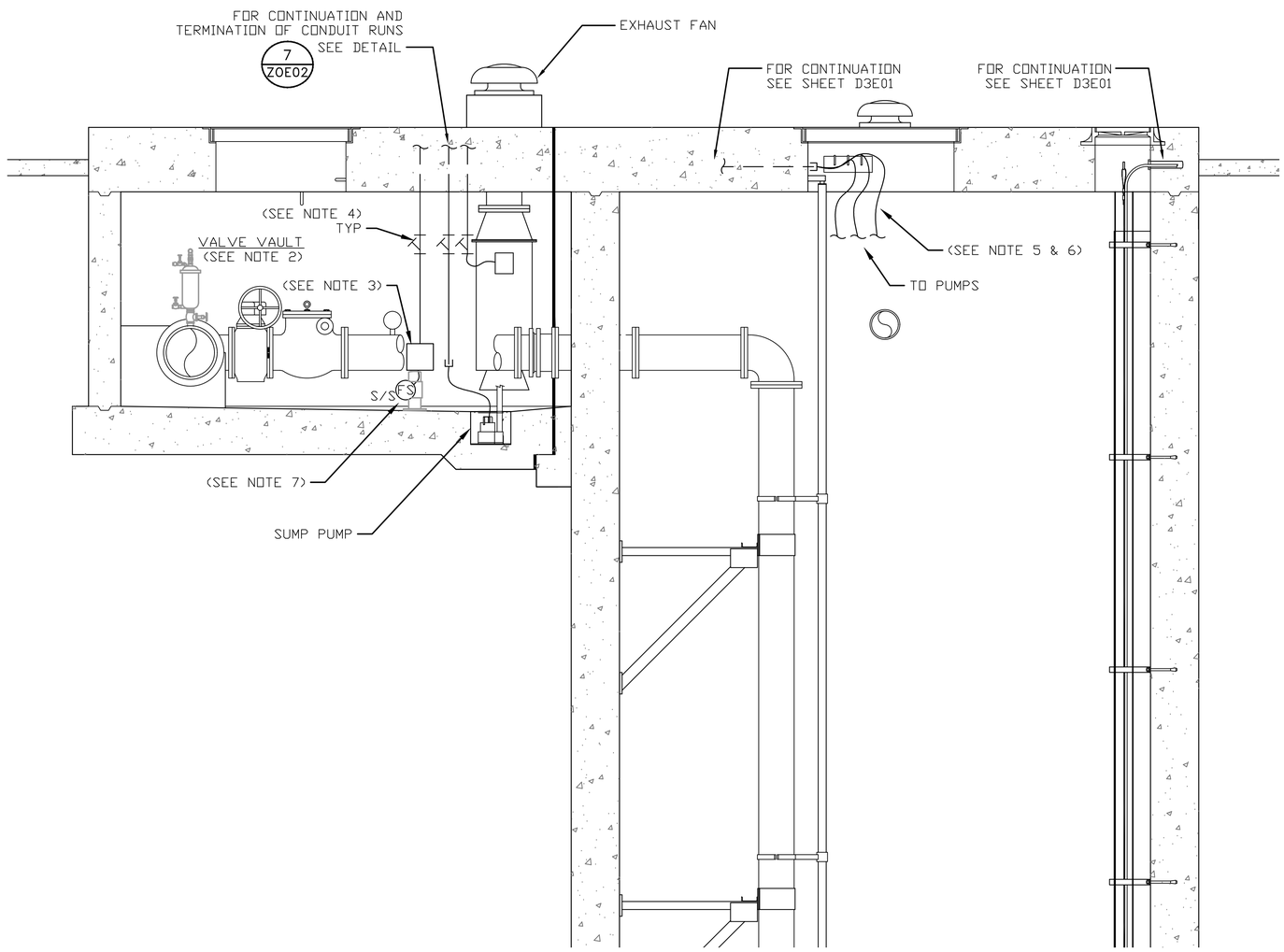

SECTION A / D3E01

NOTES TO DESIGN ENGINEER:

A. THESE LIFT STATION DRAWINGS ARE CONSIDERED TO BE DESIGN GUIDELINES FOR THE CONSTRUCTION OF CITY OF HOUSTON WASTEWATER SUBMERSIBLE LIFT STATIONS. THEIR INTENDED USE IS AS A FRAMEWORK FOR THE CONTRACTED DESIGN ENGINEER IN DEVELOPING SPECIFIC LIFT STATION DESIGNS.

IT IS THE RESPONSIBILITY OF THE CONTRACTED DESIGN ENGINEER TO VERIFY THE COMPLETENESS AND ACCURACY OF THE INFORMATION HEREIN CONTAINED AND TO ADJUST ACCORDING TO PROJECT SPECIFIC REQUIREMENTS.

B. THE DESIGN ENGINEER SHALL INCORPORATE ONLY THE NECESSARY STANDARD GUIDELINE DRAWINGS AND DETAILS INTO HIS PROJECT CONTRACT DOCUMENTATION PACKAGE, AND SHALL ADJUST PAGE NUMBERS AND CROSS REFERENCING ACCORDINGLY.

C. THE DESIGN ENGINEER SHALL CONSULT THE CITY OF HOUSTON DESIGN GUIDELINES MANUAL, THE ENGINEERING DESIGN MANUAL, AND THE MASTER SPECIFICATIONS FOR FURTHER INSTRUCTIONS AND INFORMATION PERTINENT TO THESE STANDARD DESIGN GUIDELINE DRAWINGS.

D. THE DESIGN ENGINEER SHALL REMOVE THESE NOTES, ALL REFERENCES TO THESE NOTES, AND ANY OTHER EXTRANEOUS INFORMATION FROM THE DESIGN GUIDELINE DRAWINGS. DESIGN ENGINEER SHALL PROVIDE ANY NOTES OR OTHER APPROPRIATE INFORMATION NECESSARY TO COMPLETE THE LIFT STATION DESIGN.

NOTES:

1. GROUNDING SHALL BE PER N.E.C. MINIMUM REQUIREMENTS.
2. THE ELECTRICAL INSTALLATION WITHIN THE VALVE VAULT SHALL BE EXPLOSION PROOF IN ACCORDANCE WITH ARTICLE 510 OF THE NEC FOR CLASS I, DIVISION 1, GROUP C & D.
3. WHERE JUNCTION BOXES ARE SHOWN, THEY SHALL BE USED FOR PULLING PURPOSES ONLY. SPLICES WILL NOT BE ALLOWED.
4. FOR MOTOR FEEDER AND CONTROL CABLES, INSTALL TYPE CSBE CABLE SEALING FITTING AT JUNCTION BOX ENTRANCE AND EXPLOSION PROOF SEAL IN CONDUITS TO CONTROL BUILDING OR PANEL.
5. TERMINATE PUMP POWER & CONTROL CONDUITS WITH CSBE SEAL. ATTACH STAINLESS STEEL SPLIT SLEEVE CABLE SUPPORT ON EACH POWER AND CONTROL CABLE.
6. ALL PUMP POWER AND CONTROL CABLE LEADS MUST BE THE SAME LENGTH REGARDLESS OF PUMP LOCATION FROM TERMINAL/JUNCTION BOX.
7. FLOAT SWITCH SHOWN IN APPROXIMATE LOCATION. ACTUAL LOCATION SHALL BE ESTABLISHED DURING CONSTRUCTION.

ELEVATION SECTION
3 PUMP CONDUIT ROUTING
ALTERNATE LOW PROFILE CONFIGURATION

PROJECT NO.
R-000265-0XXX-X

TITLE
CITY OF HOUSTON
DESIGN GUIDELINE DRAWINGS
FOR SUBMERSIBLE LIFT STATIONS

CITY OF HOUSTON
DEPARTMENT OF PUBLIC WORKS AND ENGINEERING
ENGINEERING AND CONSTRUCTION

DESIGN ENGINEER TO INCLUDE COH STANDARD TITLE BLOCK ON ALL DRAWINGS, SEE STANDARD TITLE BLOCK DETAIL ON SHEET Z0C0X

REV. NO.	DESCRIPTION	APP'D	DATE

SCALE: XX" = 1'-0"
SUBMITTED:
DATE:
SURVEY BY:
FIELD BOOK NO.
DESIGNED BY:
DRAWN BY:
SHEET NO. OF SHEETS
DWG. NO.
D3E02-0516

CADD DWG. FILE NO. :
D3E02-3P.DWG

COHSTD.BDR

0 1 2 3 ORIGINAL SCALE IN INCHES FOR REDUCED PLANS

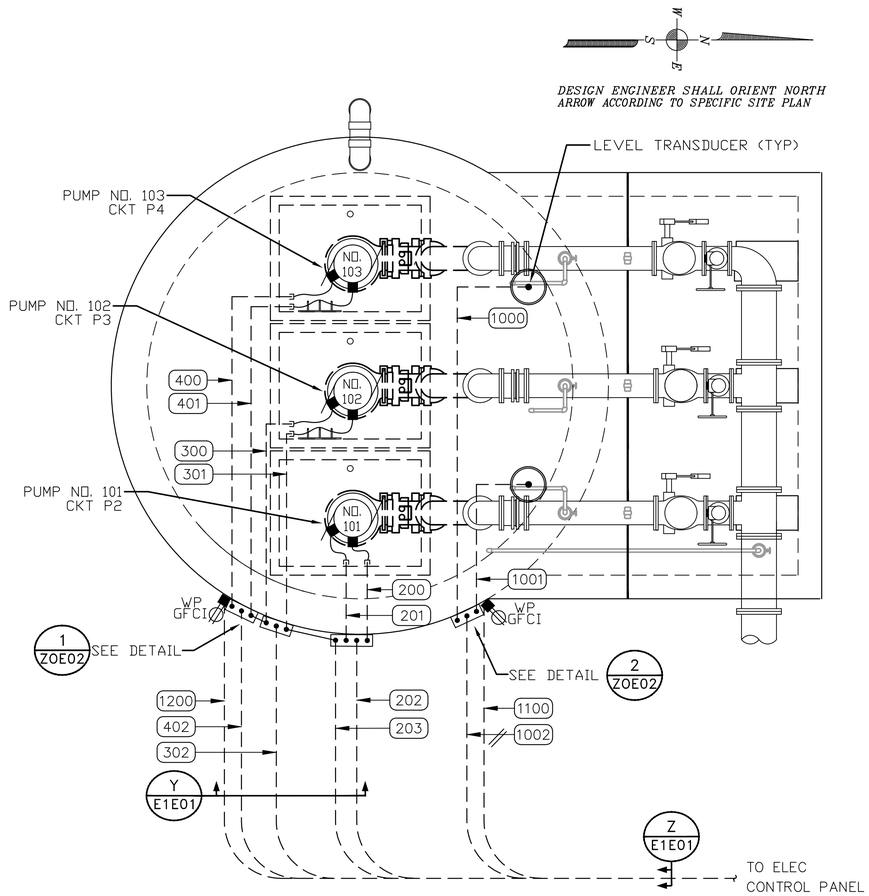

LIFT STATION PLAN

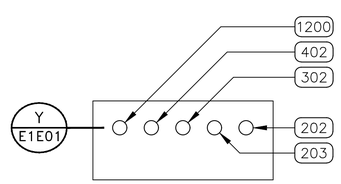

DUCTBANK SECTIONS

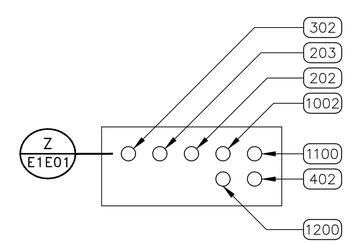

NOTES TO DESIGN ENGINEER:

A. THESE LIFT STATION DRAWINGS ARE CONSIDERED TO BE DESIGN GUIDELINES FOR THE CONSTRUCTION OF CITY OF HOUSTON WASTEWATER SUBMERSIBLE LIFT STATIONS. THEIR INTENDED USE IS AS A FRAMEWORK FOR THE CONTRACTED DESIGN ENGINEER IN DEVELOPING SPECIFIC LIFT STATION DESIGNS.

IT IS THE RESPONSIBILITY OF THE CONTRACTED DESIGN ENGINEER TO VERIFY THE COMPLETENESS AND ACCURACY OF THE INFORMATION HEREIN CONTAINED AND TO ADJUST ACCORDING TO PROJECT SPECIFIC REQUIREMENTS.

B. THE DESIGN ENGINEER SHALL INCORPORATE ONLY THE NECESSARY STANDARD GUIDELINE DRAWINGS AND DETAILS INTO HIS PROJECT CONTRACT DOCUMENTATION PACKAGE, AND SHALL ADJUST PAGE NUMBERS AND CROSS REFERENCING ACCORDINGLY.

C. THE DESIGN ENGINEER SHALL CONSULT THE CITY OF HOUSTON DESIGN GUIDELINES MANUAL, THE ENGINEERING DESIGN MANUAL, AND THE MASTER SPECIFICATIONS FOR FURTHER INSTRUCTIONS AND INFORMATION PERTINENT TO THESE STANDARD DESIGN GUIDELINE DRAWINGS.

D. THE DESIGN ENGINEER SHALL REMOVE THESE NOTES, ALL REFERENCES TO THESE NOTES, AND ANY OTHER EXTRANEOUS INFORMATION FROM THE DESIGN GUIDELINE DRAWINGS. DESIGN ENGINEER SHALL PROVIDE ANY NOTES OR OTHER APPROPRIATE INFORMATION NECESSARY TO COMPLETE THE LIFT STATION DESIGN.

NOTES:

1. GROUNDING SHALL BE PER N.E.C. MINIMIUM REQUIREMENTS.
2. THE ELECTRICAL INSTALLATION WITHIN THE WET WELL SHALL BE EXPLOSION PROOF IN ACCORDANCE WITH ARTICLE 510 OF THE NEC FOR CLASS I, DIVISION 1, GROUP C & D.
3. WHERE JUNCTION BOXES ARE SHOWN, THEY SHALL BE USED FOR PULLING OR TERMINATION PURPOSES ONLY. SPLICES WILL NOT BE ALLOWED EXCEPT AS PROVIDED BY NOTE 4 AND AT LIGHTING AND RECEPTACLE TERMINATIONS.
4. FOR MOTOR FEEDER AND CONTROL CABLES, INSTALL TYPE CSBE CABLE SEALING FITTING AT JUNCTION BOX ENTRANCE AND EXPLOSION PROOF SEAL IN CONDUITS TO CONTROL BUILDING OR PANEL.
5. TERMINATE PUMP POWER & CONTROL CONDUITS WITH CSBE SEAL. ATTACH STAINLESS STEEL SPLIT SLEEVE CABLE SUPPORT ON EACH POWER AND CONTROL CABLE.
6. ALL PUMP POWER AND CONTROL CABLE LEADS MUST BE THE SAME LENGTH REGARDLESS OF PUMP LOCATION FROM TERMINAL/JUNCTION BOX.
7. LEVEL TRANSMITTERS SHOWN IN APPROXIMATE LOCATION ACTUAL LOCATION SHALL BE OPPOSITE SIDE OF INLET PIPE.

CONDUIT LAYOUT FOR LIFT STATION
3 PUMP
ALTERNATE HIGH PROFILE CONFIGURATION

PROJECT NO.
R-000265-0XXX-X

TITLE
CITY OF HOUSTON
DESIGN GUIDELINE DRAWINGS
FOR SUBMERSIBLE LIFT STATIONS

CITY OF HOUSTON
DEPARTMENT OF PUBLIC WORKS AND ENGINEERING
ENGINEERING AND CONSTRUCTION

DESIGN ENGINEER TO INCLUDE COH STANDARD TITLE BLOCK ON ALL DRAWINGS, SEE STANDARD TITLE BLOCK DETAIL ON SHEET Z0COX

REV. NO.	DESCRIPTION	APP'D	DATE

SCALE: XX" = 1'-0"
SUBMITTED:
DATE:
SURVEY BY:
FIELD BOOK NO.
DESIGNED BY:
DRAWN BY:
SHEET NO. OF SHEETS
DWG. NO.
E1E01-0516

CADD DWG. FILE NO. :
E1E01-3P.DWG

COHSTD.BDR

0 1 2 3 ORIGINAL SCALE IN INCHES FOR REDUCED PLANS

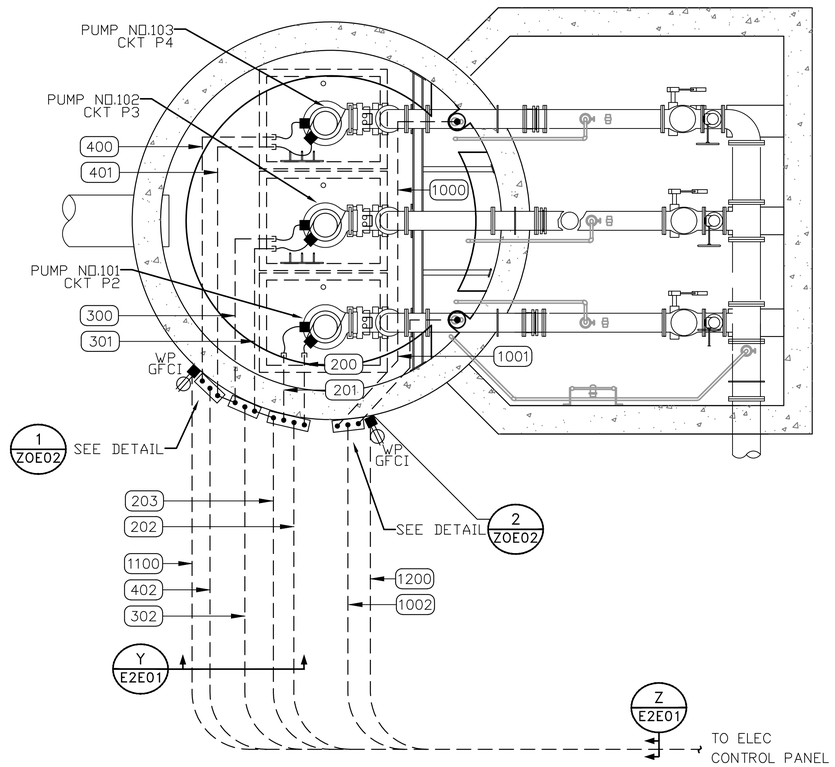

LIFT STATION PLAN

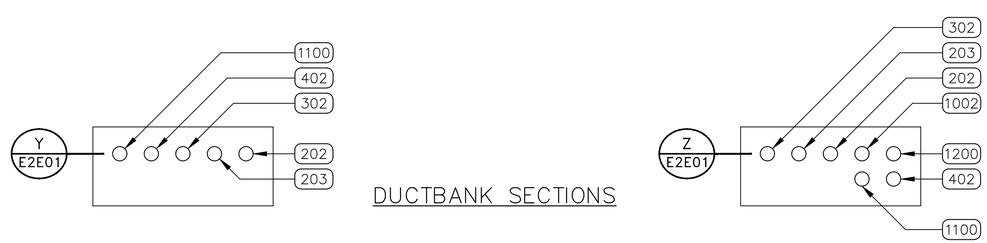

DUCTBANK SECTIONS

NOTES TO DESIGN ENGINEER:

A. THESE LIFT STATION DRAWINGS ARE CONSIDERED TO BE DESIGN GUIDELINES FOR THE CONSTRUCTION OF CITY OF HOUSTON WASTEWATER SUBMERSIBLE LIFT STATIONS. THEIR INTENDED USE IS AS A FRAMEWORK FOR THE CONTRACTED DESIGN ENGINEER IN DEVELOPING SPECIFIC LIFT STATION DESIGNS.

IT IS THE RESPONSIBILITY OF THE CONTRACTED DESIGN ENGINEER TO VERIFY THE COMPLETENESS AND ACCURACY OF THE INFORMATION HEREIN CONTAINED AND TO ADJUST ACCORDING TO PROJECT SPECIFIC REQUIREMENTS.

B. THE DESIGN ENGINEER SHALL INCORPORATE ONLY THE NECESSARY STANDARD GUIDELINE DRAWINGS AND DETAILS INTO HIS PROJECT CONTRACT DOCUMENTATION PACKAGE, AND SHALL ADJUST PAGE NUMBERS AND CROSS REFERENCING ACCORDINGLY.

C. THE DESIGN ENGINEER SHALL CONSULT THE CITY OF HOUSTON DESIGN GUIDELINES MANUAL, THE ENGINEERING DESIGN MANUAL, AND THE MASTER SPECIFICATIONS FOR FURTHER INSTRUCTIONS AND INFORMATION PERTINENT TO THESE STANDARD DESIGN GUIDELINE DRAWINGS.

D. THE DESIGN ENGINEER SHALL REMOVE THESE NOTES, ALL REFERENCES TO THESE NOTES, AND ANY OTHER EXTRANEOUS INFORMATION FROM THE DESIGN GUIDELINE DRAWINGS. DESIGN ENGINEER SHALL PROVIDE ANY NOTES OR OTHER APPROPRIATE INFORMATION NECESSARY TO COMPLETE THE LIFT STATION DESIGN.

NOTES:

1. GROUNDING SHALL BE PER N.E.C. MINIMIUM REQUIREMENTS.
2. THE ELECTRICAL INSTALLATION WITHIN THE WET WELL SHALL BE EXPLOSION PROOF IN ACCORDANCE WITH ARTICLE 510 OF THE NEC FOR CLASS I, DIVISION 1, GROUP C & D.
3. WHERE JUNCTION BOXES ARE SHOWN, THEY SHALL BE USED FOR PULLING OR TERMINATION PURPOSES ONLY. SPLICES WILL NOT BE ALLOWED EXCEPT AS PROVIDED BY NOTE 4 AND AT LIGHTING AND RECEPTACLE TERMINATIONS.
4. FOR MOTOR FEEDER AND CONTROL CABLES, INSTALL TYPE CSBE CABLE SEALING FITTING AT JUNCTION BOX ENTRANCE AND EXPLOSION PROOF SEAL IN CONDUITS TO CONTROL BUILDING OR PANEL.
5. TERMINATE PUMP POWER & CONTROL CONDUITS WITH CSBE SEAL. ATTACH STAINLESS STEEL SPLIT SLEEVE CABLE SUPPORT ON EACH POWER AND CONTROL CABLE.
6. ALL PUMP POWER AND CONTROL CABLE LEADS MUST BE THE SAME LENGTH REGARDLESS OF PUMP LOCATION FROM TERMINAL/JUNCTION BOX.
7. LEVEL TRANSMITTERS SHOWN IN APPROXIMATE LOCATION ACTUAL LOCATION SHALL BE OPPOSITE SIDE OF INLET PIPE.

CONDUIT LAYOUT FOR LIFT STATION
3 PUMP
PREFERRED LOW PROFILE CONFIGURATION

PROJECT NO.
R-000265-0XXX-X

TITLE
CITY OF HOUSTON
DESIGN GUIDELINE DRAWINGS
FOR SUBMERSIBLE LIFT STATIONS

CITY OF HOUSTON
DEPARTMENT OF PUBLIC WORKS AND ENGINEERING
ENGINEERING AND CONSTRUCTION

DESIGN ENGINEER TO INCLUDE COH STANDARD TITLE BLOCK ON ALL DRAWINGS, SEE STANDARD TITLE BLOCK DETAIL ON SHEET Z0COX

REV. NO.	DESCRIPTION	APP'D	DATE

SCALE: XX" = 1'-0"
SUBMITTED:
DATE:
SURVEY BY:
FIELD BOOK NO.
DESIGNED BY:
DRAWN BY:
SHEET NO. OF SHEETS
DWG. NO.
E2E01-0516

CADD DWG. FILE NO. :
E2E01-3P.DWG

COHSTD.BDR

0 1 2 3 ORIGINAL SCALE IN INCHES FOR REDUCED PLANS

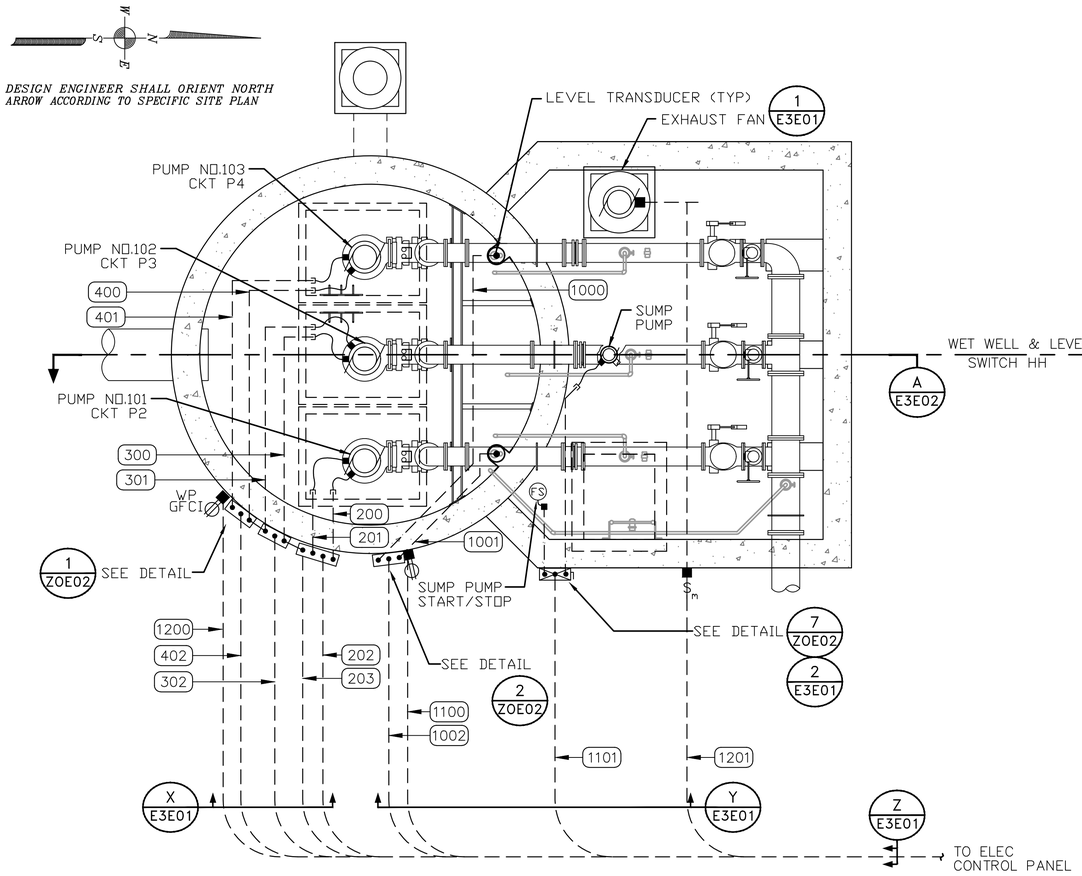

LIFT STATION PLAN

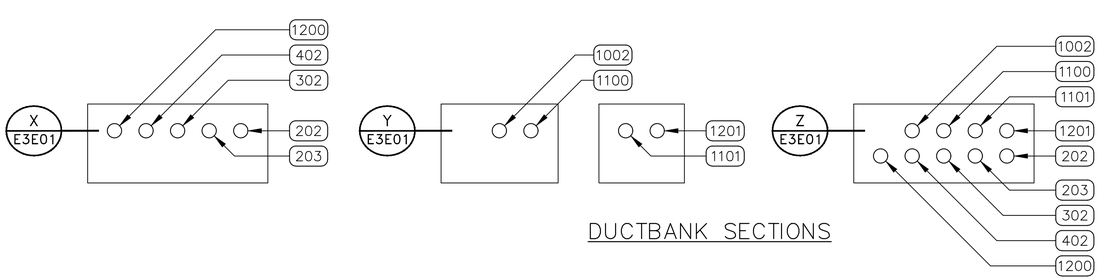

DUCTBANK SECTIONS

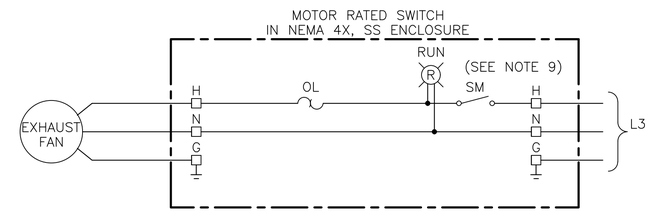

EXHAUST FAN

SCHEMATIC 1 E3E01
(SEE NOTE 9)

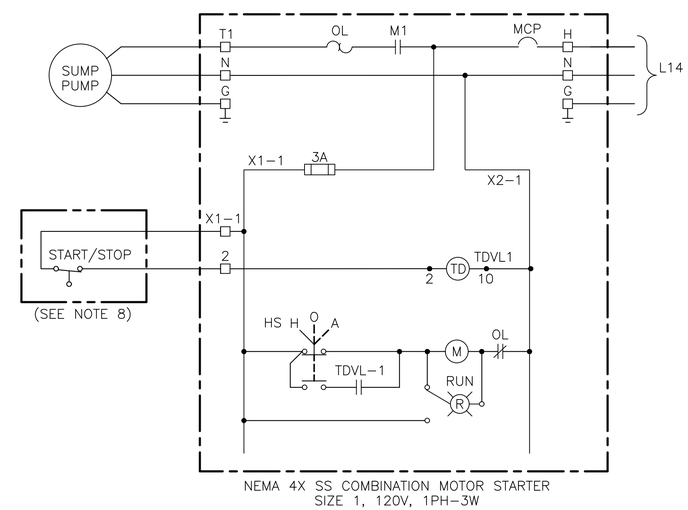

NEMA 4X SS COMBINATION MOTOR STARTER
SIZE 1, 120V, 1PH-3W

SUMP PUMP

SCHEMATIC 2 E3E01

NOTES TO DESIGN ENGINEER:

A. THESE LIFT STATION DRAWINGS ARE CONSIDERED TO BE DESIGN GUIDELINES FOR THE CONSTRUCTION OF CITY OF HOUSTON WASTEWATER SUBMERSIBLE LIFT STATIONS. THEIR INTENDED USE IS AS A FRAMEWORK FOR THE CONTRACTED DESIGN ENGINEER IN DEVELOPING SPECIFIC LIFT STATION DESIGNS.

IT IS THE RESPONSIBILITY OF THE CONTRACTED DESIGN ENGINEER TO VERIFY THE COMPLETENESS AND ACCURACY OF THE INFORMATION HEREIN CONTAINED AND TO ADJUST ACCORDING TO PROJECT SPECIFIC REQUIREMENTS.

B. THE DESIGN ENGINEER SHALL INCORPORATE ONLY THE NECESSARY STANDARD GUIDELINE DRAWINGS AND DETAILS INTO HIS PROJECT CONTRACT DOCUMENTATION PACKAGE, AND SHALL ADJUST PAGE NUMBERS AND CROSS REFERENCING ACCORDINGLY.

C. THE DESIGN ENGINEER SHALL CONSULT THE CITY OF HOUSTON DESIGN GUIDELINES MANUAL, THE ENGINEERING DESIGN MANUAL, AND THE MASTER SPECIFICATIONS FOR FURTHER INSTRUCTIONS AND INFORMATION PERTINENT TO THESE STANDARD DESIGN GUIDELINE DRAWINGS.

D. THE DESIGN ENGINEER SHALL REMOVE THESE NOTES, ALL REFERENCES TO THESE NOTES, AND ANY OTHER EXTRANEOUS INFORMATION FROM THE DESIGN GUIDELINE DRAWINGS. DESIGN ENGINEER SHALL PROVIDE ANY NOTES OR OTHER APPROPRIATE INFORMATION NECESSARY TO COMPLETE THE LIFT STATION DESIGN.

NOTES:

1. GROUNDING SHALL BE PER N.E.C. MINIMIUM REQUIREMENTS.
2. THE ELECTRICAL INSTALLATION WITHIN THE WET WELL SHALL BE EXPLOSION PROOF IN ACCORDANCE WITH ARTICLE 510 OF THE NEC FOR CLASS I, DIVISION 1, GROUP C & D.
3. WHERE JUNCTION BOXES ARE SHOWN, THEY SHALL BE USED FOR PULLING OR TERMINATION PURPOSES ONLY. SPLICES WILL NOT BE ALLOWED EXCEPT AS PROVIDED BY NOTE 4 AND AT LIGHTING AND RECEPTACLE TERMINATIONS.
4. FOR MOTOR FEEDER AND CONTROL CABLES, INSTALL TYPE CSBE CABLE SEALING FITTING AT JUNCTION BOX ENTRANCE AND EXPLOSION PROOF SEAL IN CONDUITS TO CONTROL BUILDING OR PANEL.
5. TERMINATE PUMP POWER & CONTROL CONDUITS WITH CSBE SEAL. ATTACH STAINLESS STEEL SPLIT SLEEVE CABLE SUPPORT ON EACH POWER AND CONTROL CABLE.
6. ALL PUMP POWER AND CONTROL CABLE LEADS MUST BE THE SAME LENGTH REGARDLESS OF PUMP LOCATION FROM TERMINAL/JUNCTION BOX.
7. LEVEL TRANSMITTERS SHOWN IN APPROXIMATE LOCATION ACTUAL LOCATION SHALL BE OPPOSITE SIDE OF INLET PIPE.
8. FLOAT SWITCH WITH CABLE LENGTH SHALL BE AS REQUIREDTO PROVIDE CONTINUIOUS RUN TO MOTOR STARTER.
9. MOTOR RATED SWITCH SIZE SHALL BE PER NAMEPLATE RATING OF MOTOR.

CONDUIT LAYOUT FOR LIFT STATION
3 PUMP
ALTERNATE LOW PROFILE CONFIGURATION

PROJECT NO.
R-000265-0XXX-X

TITLE
CITY OF HOUSTON
DESIGN GUIDELINE DRAWINGS
FOR SUBMERSIBLE LIFT STATIONS

CITY OF HOUSTON
DEPARTMENT OF PUBLIC WORKS AND ENGINEERING
ENGINEERING AND CONSTRUCTION

DESIGN ENGINEER TO INCLUDE COH STANDARD TITLE BLOCK ON ALL DRAWINGS, SEE STANDARD TITLE BLOCK DETAIL ON SHEET Z0COX

REV. NO.	DESCRIPTION	APP'D	DATE

SCALE: XX" = 1'-0"
SUBMITTED:
DATE:
SURVEY BY:
FIELD BOOK NO.
DESIGNED BY:
DRAWN BY:
SHEET NO. OF SHEETS
DWG. NO. E3E01-0516

CADD DWG. FILE NO. : E3E01-3P.DWG

COHSTD.BDR

0 1 2 3 ORIGINAL SCALE IN INCHES FOR REDUCED PLANS

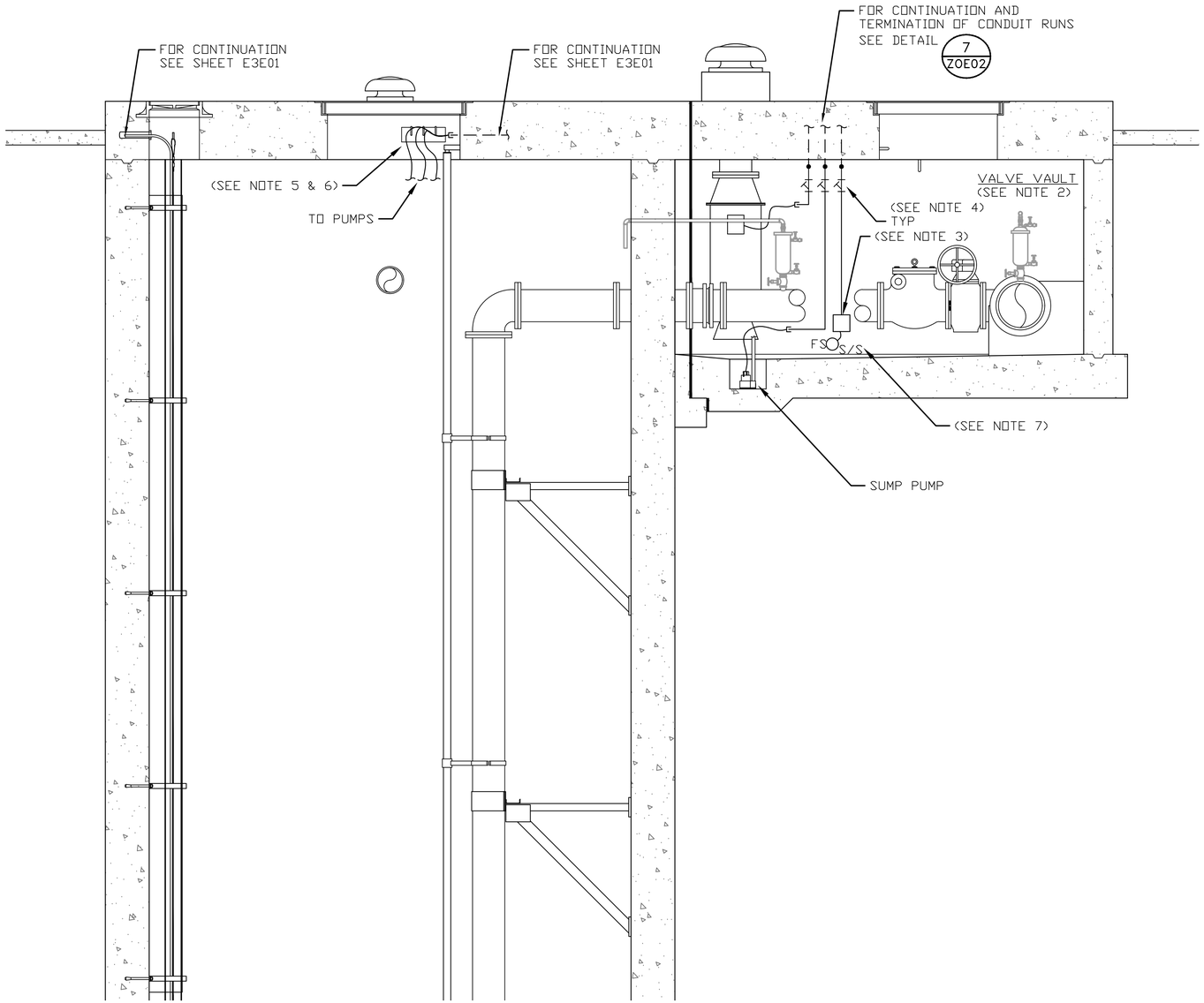

SECTION A E3E01

NOTES TO DESIGN ENGINEER:

A. THESE LIFT STATION DRAWINGS ARE CONSIDERED TO BE DESIGN GUIDELINES FOR THE CONSTRUCTION OF CITY OF HOUSTON WASTEWATER SUBMERSIBLE LIFT STATIONS. THEIR INTENDED USE IS AS A FRAMEWORK FOR THE CONTRACTED DESIGN ENGINEER IN DEVELOPING SPECIFIC LIFT STATION DESIGNS.

IT IS THE RESPONSIBILITY OF THE CONTRACTED DESIGN ENGINEER TO VERIFY THE COMPLETENESS AND ACCURACY OF THE INFORMATION HEREIN CONTAINED AND TO ADJUST ACCORDING TO PROJECT SPECIFIC REQUIREMENTS.

B. THE DESIGN ENGINEER SHALL INCORPORATE ONLY THE NECESSARY STANDARD GUIDELINE DRAWINGS AND DETAILS INTO HIS PROJECT CONTRACT DOCUMENTATION PACKAGE, AND SHALL ADJUST PAGE NUMBERS AND CROSS REFERENCING ACCORDINGLY.

C. THE DESIGN ENGINEER SHALL CONSULT THE CITY OF HOUSTON DESIGN GUIDELINES MANUAL, THE ENGINEERING DESIGN MANUAL, AND THE MASTER SPECIFICATIONS FOR FURTHER INSTRUCTIONS AND INFORMATION PERTINENT TO THESE STANDARD DESIGN GUIDELINE DRAWINGS.

D. THE DESIGN ENGINEER SHALL REMOVE THESE NOTES, ALL REFERENCES TO THESE NOTES, AND ANY OTHER EXTRANEOUS INFORMATION FROM THE DESIGN GUIDELINE DRAWINGS. DESIGN ENGINEER SHALL PROVIDE ANY NOTES OR OTHER APPROPRIATE INFORMATION NECESSARY TO COMPLETE THE LIFT STATION DESIGN.

NOTES:

1. GROUNDING SHALL BE PER N.E.C. MINIMUM REQUIREMENTS.
2. THE ELECTRICAL INSTALLATION WITHIN THE VALVE VAULT SHALL BE EXPLOSION PROOF IN ACCORDANCE WITH ARTICLE 510 OF THE NEC FOR CLASS I, DIVISION 1, GROUP C & D.
3. WHERE JUNCTION BOXES ARE SHOWN, THEY SHALL BE USED FOR PULLING PURPOSES ONLY. SPLICES WILL ONLY. SPLICES WILL NOT BE ALLOWED.
4. FOR MOTOR FEEDER AND CONTROL CABLES, INSTALL TYPE CSBE CABLE SEALING FITTING AT JUNCTION BOX ENTRANCE AND EXPLOSION PROOF SEAL IN CONDUITS TO CONTROL BUILDING OR PANEL.
5. TERMINATE PUMP POWER & CONTROL CONDUITS WITH CSBE SEAL. ATTACH STAINLESS STEEL SPLIT SLEEVE CABLE SUPPORT ON EACH POWER AND CONTROL CABLE.
6. ALL PUMP POWER AND CONTROL CABLE LEADS MUST BE THE SAME LENGTH REGARDLESS OF PUMP LOCATION FROM TERMINAL/JUNCTION BOX.
7. FLOAT SWITCH SHOWN IN APPROXIMATE LOCATION. ACTUAL LOCATION SHALL BE ESTABLISHED DURING CONSTRUCTION.

ELEVATION SECTION
3 PUMP CONDUIT ROUTING
ALTERNATE LOW PROFILE CONFIGURATION

PROJECT NO.
R-000265-0XXX-X

TITLE
CITY OF HOUSTON
DESIGN GUIDELINE DRAWINGS
FOR SUBMERSIBLE LIFT STATIONS

CITY OF HOUSTON
DEPARTMENT OF PUBLIC WORKS AND ENGINEERING
ENGINEERING AND CONSTRUCTION

DESIGN ENGINEER TO INCLUDE COH STANDARD TITLE BLOCK ON ALL DRAWINGS, SEE STANDARD TITLE BLOCK DETAIL ON SHEET Z0COX

REV. NO.	DESCRIPTION	APP'D	DATE

SCALE: XX" = 1'-0"
SUBMITTED:
DATE:
SURVEY BY:
FIELD BOOK NO.
DESIGNED BY:
DRAWN BY:
SHEET NO. OF SHEETS
DWG. NO.
E3E02-0516

CADD DWG. FILE NO. :
E3E02-3P.DWG

COHSTD.BDR

0 1 2 3 ORIGINAL SCALE IN INCHES FOR REDUCED PLANS

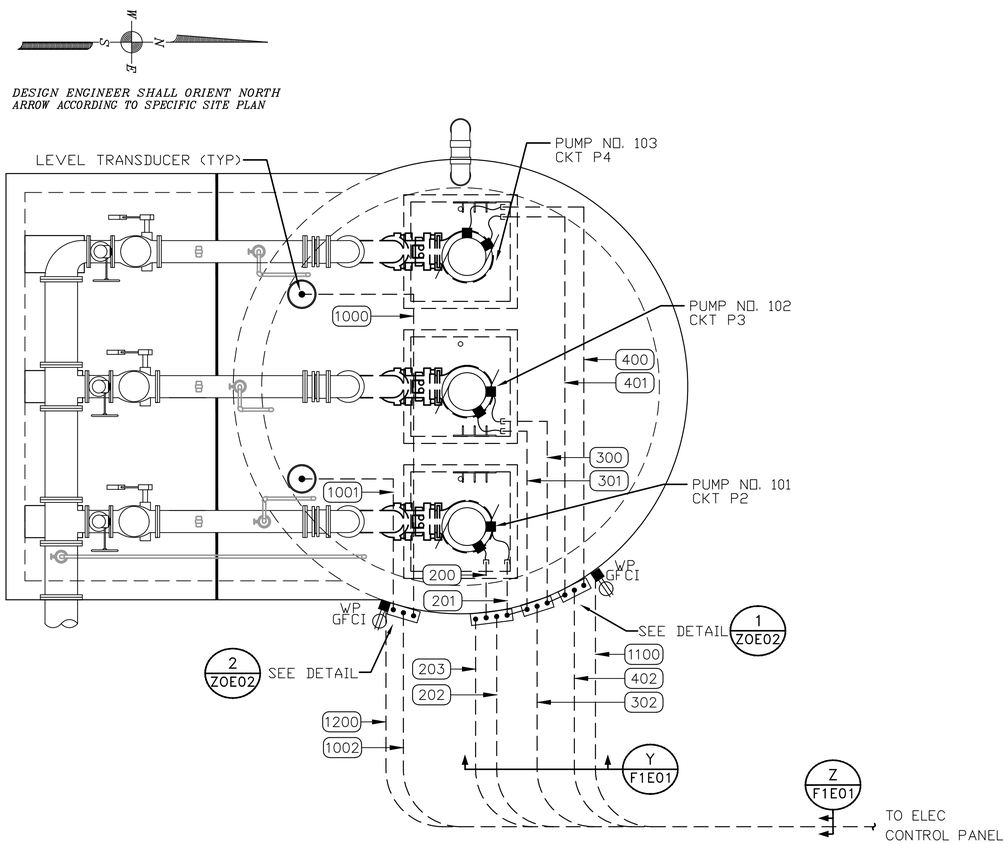

LIFT STATION PLAN

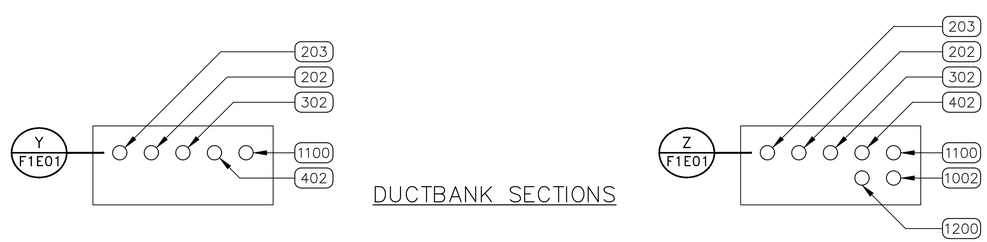

DUCTBANK SECTIONS

NOTES TO DESIGN ENGINEER:

A. THESE LIFT STATION DRAWINGS ARE CONSIDERED TO BE DESIGN GUIDELINES FOR THE CONSTRUCTION OF CITY OF HOUSTON WASTEWATER SUBMERSIBLE LIFT STATIONS. THEIR INTENDED USE IS AS A FRAMEWORK FOR THE CONTRACTED DESIGN ENGINEER IN DEVELOPING SPECIFIC LIFT STATION DESIGNS.

IT IS THE RESPONSIBILITY OF THE CONTRACTED DESIGN ENGINEER TO VERIFY THE COMPLETENESS AND ACCURACY OF THE INFORMATION HEREIN CONTAINED AND TO ADJUST ACCORDING TO PROJECT SPECIFIC REQUIREMENTS.

B. THE DESIGN ENGINEER SHALL INCORPORATE ONLY THE NECESSARY STANDARD GUIDELINE DRAWINGS AND DETAILS INTO HIS PROJECT CONTRACT DOCUMENTATION PACKAGE, AND SHALL ADJUST PAGE NUMBERS AND CROSS REFERENCING ACCORDINGLY.

C. THE DESIGN ENGINEER SHALL CONSULT THE CITY OF HOUSTON DESIGN GUIDELINES MANUAL, THE ENGINEERING DESIGN MANUAL, AND THE MASTER SPECIFICATIONS FOR FURTHER INSTRUCTIONS AND INFORMATION PERTINENT TO THESE STANDARD DESIGN GUIDELINE DRAWINGS.

D. THE DESIGN ENGINEER SHALL REMOVE THESE NOTES, ALL REFERENCES TO THESE NOTES, AND ANY OTHER EXTRANEOUS INFORMATION FROM THE DESIGN GUIDELINE DRAWINGS. DESIGN ENGINEER SHALL PROVIDE ANY NOTES OR OTHER APPROPRIATE INFORMATION NECESSARY TO COMPLETE THE LIFT STATION DESIGN.

NOTES:

1. GROUNDING SHALL BE PER N.E.C. MINIMIUM REQUIREMENTS.
2. THE ELECTRICAL INSTALLATION WITHIN THE WET WELL SHALL BE EXPLOSION PROOF IN ACCORDANCE WITH ARTICLE 510 OF THE NEC FOR CLASS I, DIVISION 1, GROUP C & D.
3. WHERE JUNCTION BOXES ARE SHOWN, THEY SHALL BE USED FOR PULLING OR TERMINATION PURPOSES ONLY. SPLICES WILL NOT BE ALLOWED EXCEPT AS PROVIDED BY NOTE 4 AND AT LIGHTING AND RECEPTACLE TERMINATIONS.
4. FOR MOTOR FEEDER AND CONTROL CABLES, INSTALL TYPE CSBE CABLE SEALING FITTING AT JUNCTION BOX ENTRANCE AND EXPLOSION PROOF SEAL IN CONDUITS TO CONTROL BUILDING OR PANEL.
5. TERMINATE PUMP POWER & CONTROL CONDUITS WITH CSBE SEAL. ATTACH STAINLESS STEEL SPLIT SLEEVE CABLE SUPPORT ON EACH POWER AND CONTROL CABLE.
6. ALL PUMP POWER AND CONTROL CABLE LEADS MUST BE THE SAME LENGTH REGARDLESS OF PUMP LOCATION FROM TERMINAL/JUNCTION BOX.
7. LEVEL TRANSMITTERS SHOWN IN APPROXIMATE LOCATION ACTUAL LOCATION SHALL BE OPPOSITE SIDE OF INLET PIPE.

CONDUIT LAYOUT FOR LIFT STATION
3 PUMP
ALTERNATE HIGH PROFILE CONFIGURATION

PROJECT NO. R-000265-0XXX-X

TITLE CITY OF HOUSTON
DESIGN GUIDELINE DRAWINGS
FOR SUBMERSIBLE LIFT STATIONS

CITY OF HOUSTON
DEPARTMENT OF PUBLIC WORKS AND ENGINEERING
ENGINEERING AND CONSTRUCTION

DESIGN ENGINEER TO INCLUDE COH STANDARD TITLE BLOCK ON ALL DRAWINGS, SEE STANDARD TITLE BLOCK DETAIL ON SHEET Z0COX

REV. NO.	DESCRIPTION	APP'D	DATE

SCALE: XX" = 1'-0"
SUBMITTED:
DATE:
SURVEY BY:
FIELD BOOK NO.
DESIGNED BY:
DRAWN BY:
SHEET NO. OF SHEETS
DWG. NO. F1E01-0516

CADD DWG. FILE NO. : F1E01-3P.DWG

COHSTD.BDR

0 1 2 3 ORIGINAL SCALE IN INCHES FOR REDUCED PLANS

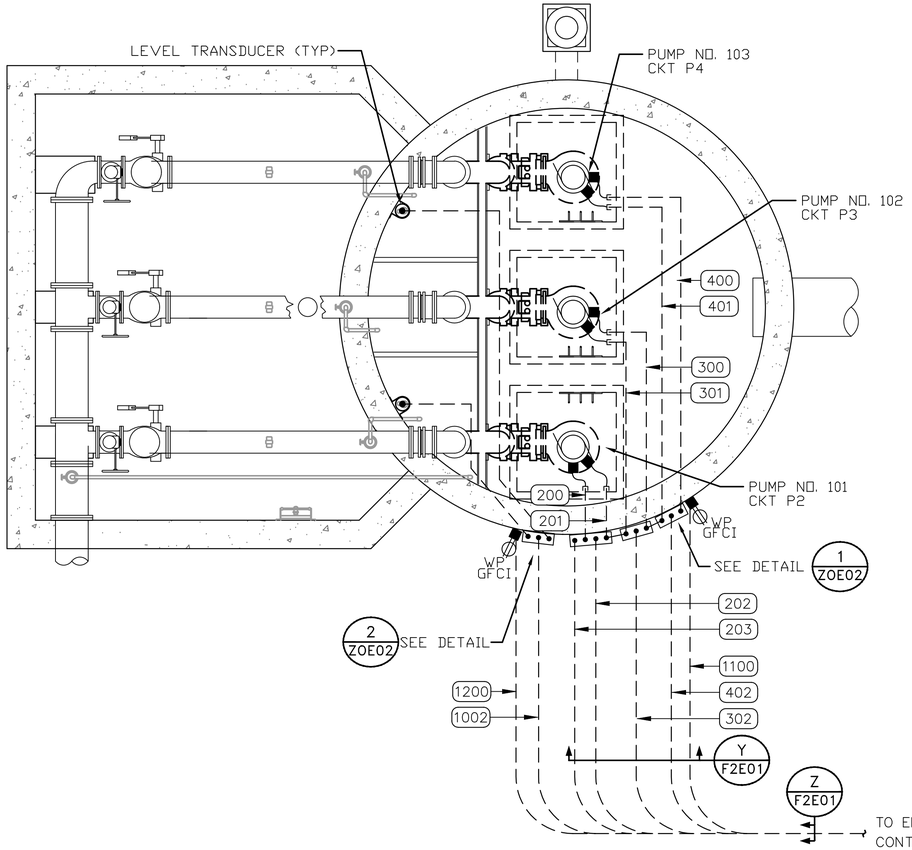

LIFT STATION PLAN

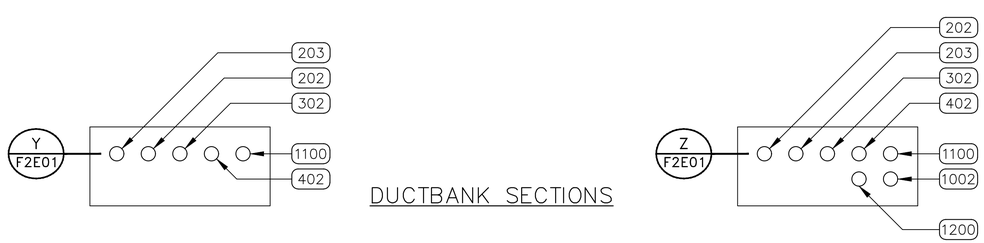

DUCTBANK SECTIONS

NOTES TO DESIGN ENGINEER:

A. THESE LIFT STATION DRAWINGS ARE CONSIDERED TO BE DESIGN GUIDELINES FOR THE CONSTRUCTION OF CITY OF HOUSTON WASTEWATER SUBMERSIBLE LIFT STATIONS. THEIR INTENDED USE IS AS A FRAMEWORK FOR THE CONTRACTED DESIGN ENGINEER IN DEVELOPING SPECIFIC LIFT STATION DESIGNS.

IT IS THE RESPONSIBILITY OF THE CONTRACTED DESIGN ENGINEER TO VERIFY THE COMPLETENESS AND ACCURACY OF THE INFORMATION HEREIN CONTAINED AND TO ADJUST ACCORDING TO PROJECT SPECIFIC REQUIREMENTS.

B. THE DESIGN ENGINEER SHALL INCORPORATE ONLY THE NECESSARY STANDARD GUIDELINE DRAWINGS AND DETAILS INTO HIS PROJECT CONTRACT DOCUMENTATION PACKAGE, AND SHALL ADJUST PAGE NUMBERS AND CROSS REFERENCING ACCORDINGLY.

C. THE DESIGN ENGINEER SHALL CONSULT THE CITY OF HOUSTON DESIGN GUIDELINES MANUAL, THE ENGINEERING DESIGN MANUAL, AND THE MASTER SPECIFICATIONS FOR FURTHER INSTRUCTIONS AND INFORMATION PERTINENT TO THESE STANDARD DESIGN GUIDELINE DRAWINGS.

D. THE DESIGN ENGINEER SHALL REMOVE THESE NOTES, ALL REFERENCES TO THESE NOTES, AND ANY OTHER EXTRANEOUS INFORMATION FROM THE DESIGN GUIDELINE DRAWINGS. DESIGN ENGINEER SHALL PROVIDE ANY NOTES OR OTHER APPROPRIATE INFORMATION NECESSARY TO COMPLETE THE LIFT STATION DESIGN.

NOTES:

1. GROUNDING SHALL BE PER N.E.C. MINIMIUM REQUIREMENTS.
2. THE ELECTRICAL INSTALLATION WITHIN THE WET WELL SHALL BE EXPLOSION PROOF IN ACCORDANCE WITH ARTICLE 510 OF THE NEC FOR CLASS I, DIVISION 1, GROUP C & D.
3. WHERE JUNCTION BOXES ARE SHOWN, THEY SHALL BE USED FOR PULLING OR TERMINATION PURPOSES ONLY. SPLICES WILL NOT BE ALLOWED EXCEPT AS PROVIDED BY NOTE 4 AND AT LIGHTING AND RECEPTACLE TERMINATIONS.
4. FOR MOTOR FEEDER AND CONTROL CABLES, INSTALL TYPE CSBE CABLE SEALING FITTING AT JUNCTION BOX ENTRANCE AND EXPLOSION PROOF SEAL IN CONDUITS TO CONTROL BUILDING OR PANEL.
5. TERMINATE PUMP POWER & CONTROL CONDUITS WITH CSBE SEAL. ATTACH STAINLESS STEEL SPLIT SLEEVE CABLE SUPPORT ON EACH POWER AND CONTROL CABLE.
6. ALL PUMP POWER AND CONTROL CABLE LEADS MUST BE THE SAME LENGTH REGARDLESS OF PUMP LOCATION FROM TERMINAL/JUNCTION BOX.
7. LEVEL TRANSMITTERS SHOWN IN APPROXIMATE LOCATION ACTUAL LOCATION SHALL BE OPPOSITE SIDE OF INLET PIPE.

CONDUIT LAYOUT FOR LIFT STATION
3 PUMP
PREFERRED LOW PROFILE CONFIGURATION

PROJECT NO. R-000265-0XXX-X

TITLE CITY OF HOUSTON
DESIGN GUIDELINE DRAWINGS
FOR SUBMERSIBLE LIFT STATIONS

CITY OF HOUSTON
DEPARTMENT OF PUBLIC WORKS AND ENGINEERING
ENGINEERING AND CONSTRUCTION

DESIGN ENGINEER TO INCLUDE COH STANDARD TITLE BLOCK ON ALL DRAWINGS, SEE STANDARD TITLE BLOCK DETAIL ON SHEET Z0C0X

REV. NO.	DESCRIPTION	APP'D	DATE

SCALE: XX" = 1'-0"
SUBMITTED:
DATE:
SURVEY BY:
FIELD BOOK NO.
DESIGNED BY:
DRAWN BY:
SHEET NO. OF SHEETS
DWG. NO. F2E01-0516

CADD DWG. FILE NO. : F2E01-3P.DWG

COHSTD.BDR

0 1 2 3 ORIGINAL SCALE IN INCHES FOR REDUCED PLANS

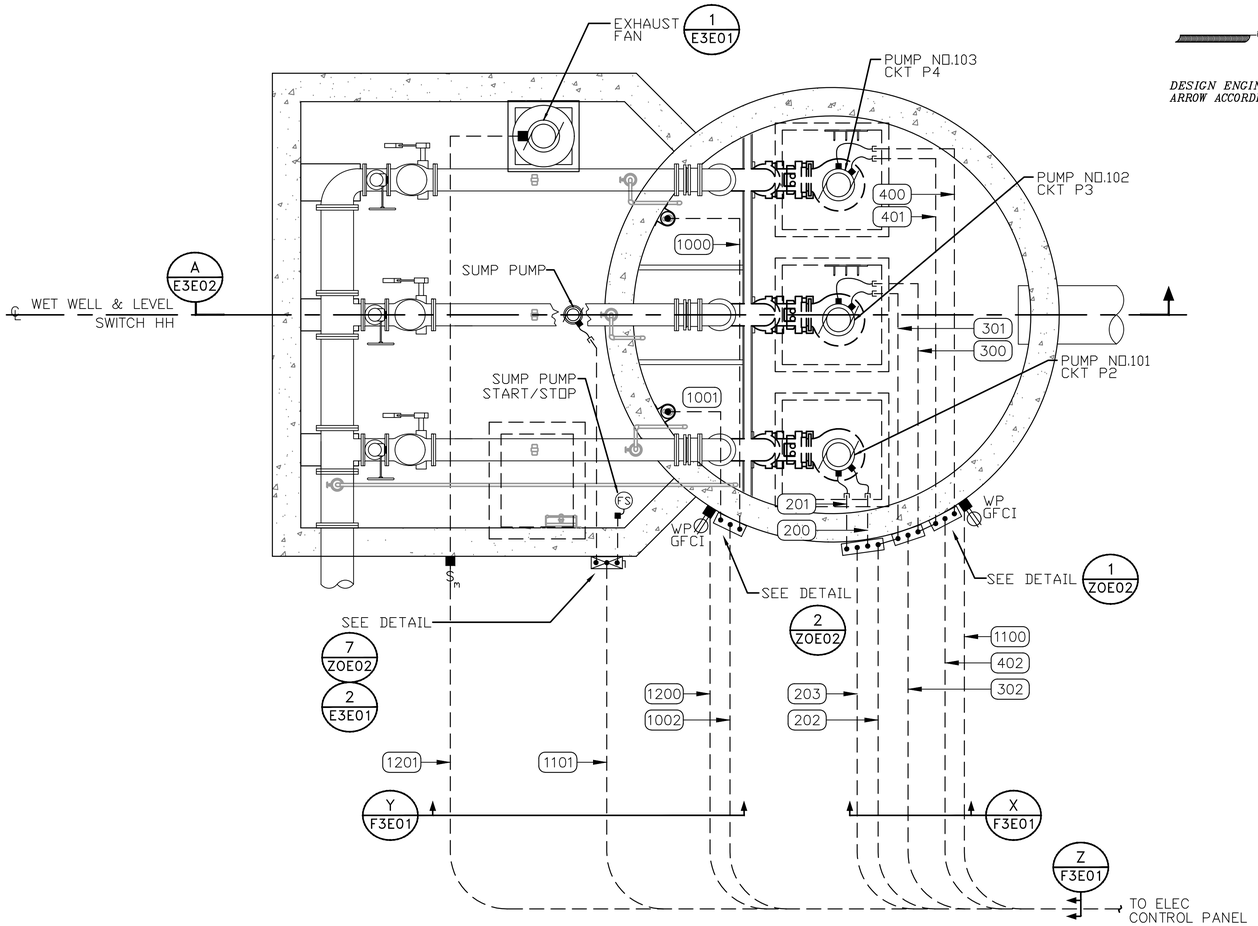

LIFT STATION PLAN

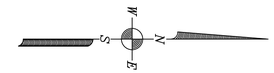

DESIGN ENGINEER SHALL ORIENT NORTH ARROW ACCORDING TO SPECIFIC SITE PLAN

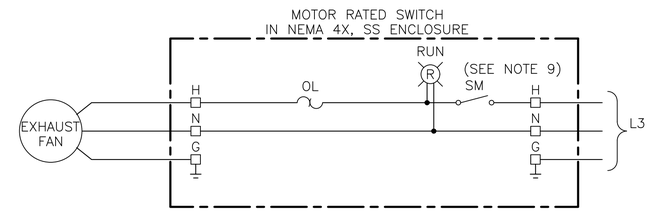

EXHAUST FAN

SCHEMATIC 1 F3E01
(SEE NOTE 9)

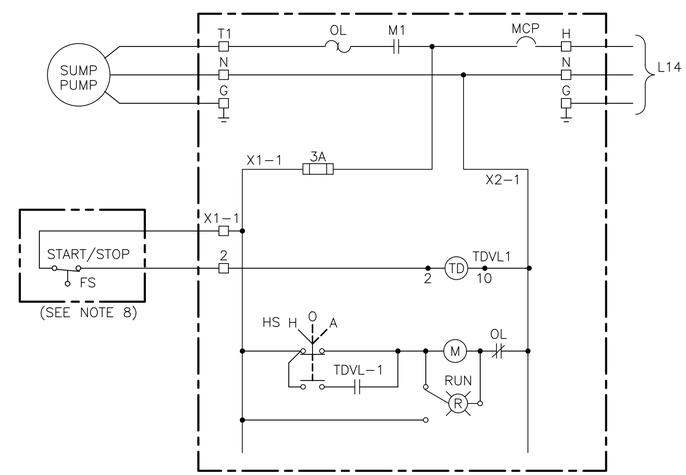

NEMA 4X SS COMBINATION MOTOR STARTER
SIZE 1, 120V, 1PH-3W

SUMP PUMP

SCHEMATIC 2 F3E01
(SEE NOTE 9)

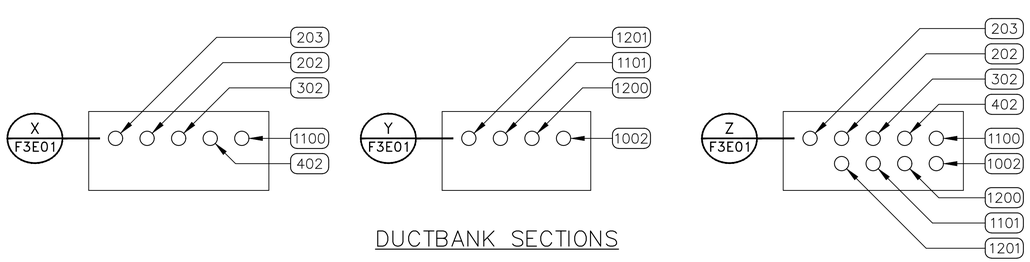

DUCTBANK SECTIONS

NOTES TO DESIGN ENGINEER:

A. THESE LIFT STATION DRAWINGS ARE CONSIDERED TO BE DESIGN GUIDELINES FOR THE CONSTRUCTION OF CITY OF HOUSTON WASTEWATER SUBMERSIBLE LIFT STATIONS. THEIR INTENDED USE IS AS A FRAMEWORK FOR THE CONTRACTED DESIGN ENGINEER IN DEVELOPING SPECIFIC LIFT STATION DESIGNS.

IT IS THE RESPONSIBILITY OF THE CONTRACTED DESIGN ENGINEER TO VERIFY THE COMPLETENESS AND ACCURACY OF THE INFORMATION HEREIN CONTAINED AND TO ADJUST ACCORDING TO PROJECT SPECIFIC REQUIREMENTS.

B. THE DESIGN ENGINEER SHALL INCORPORATE ONLY THE NECESSARY STANDARD GUIDELINE DRAWINGS AND DETAILS INTO HIS PROJECT CONTRACT DOCUMENTATION PACKAGE, AND SHALL ADJUST PAGE NUMBERS AND CROSS REFERENCING ACCORDINGLY.

C. THE DESIGN ENGINEER SHALL CONSULT THE CITY OF HOUSTON DESIGN GUIDELINES MANUAL, THE ENGINEERING DESIGN MANUAL, AND THE MASTER SPECIFICATIONS FOR FURTHER INSTRUCTIONS AND INFORMATION PERTINENT TO THESE STANDARD DESIGN GUIDELINE DRAWINGS.

D. THE DESIGN ENGINEER SHALL REMOVE THESE NOTES, ALL REFERENCES TO THESE NOTES, AND ANY OTHER EXTRANEOUS INFORMATION FROM THE DESIGN GUIDELINE DRAWINGS. DESIGN ENGINEER SHALL PROVIDE ANY NOTES OR OTHER APPROPRIATE INFORMATION NECESSARY TO COMPLETE THE LIFT STATION DESIGN.

NOTES:

1. GROUNDING SHALL BE PER N.E.C. MINIMIUM REQUIREMENTS.
2. THE ELECTRICAL INSTALLATION WITHIN THE WET WELL SHALL BE EXPLOSION PROOF IN ACCORDANCE WITH ARTICLE 510 OF THE NEC FOR CLASS I, DIVISION 1, GROUP C & D.
3. WHERE JUNCTION BOXES ARE SHOWN, THEY SHALL BE USED FOR PULLING OR TERMINATION PURPOSES ONLY. SPLICES WILL NOT BE ALLOWED EXCEPT AS PROVIDED BY NOTE 4 AND AT LIGHTING AND RECEPTACLE TERMINATIONS.
4. FOR MOTOR FEEDER AND CONTROL CABLES, INSTALL TYPE CSBE CABLE SEALING FITTING AT JUNCTION BOX ENTRANCE AND EXPLOSION PROOF SEAL IN CONDUITS TO CONTROL BUILDING OR PANEL.
5. TERMINATE PUMP POWER & CONTROL CONDUITS WITH CSBE SEAL. ATTACH STAINLESS STEEL SPLIT SLEEVE CABLE SUPPORT ON EACH POWER AND CONTROL CABLE.
6. ALL PUMP POWER AND CONTROL CABLE LEADS MUST BE THE SAME LENGTH REGARDLESS OF PUMP LOCATION FROM TERMINAL/JUNCTION BOX.
7. LEVEL TRANSMITTERS SHOWN IN APPROXIMATE LOCATION ACTUAL LOCATION SHALL BE OPPOSITE SIDE OF INLET PIPE.
8. FLOAT SWITCH WITH CABLE LENGTH SHALL BE AS REQUIREDTO PROVIDE CONTINUIOUS RUN TO MOTOR STARTER.
9. MOTOR RATED SWITCH SIZE SHALL BE PER NAMEPLATE RATING OF MOTOR.

CONDUIT LAYOUT FOR LIFT STATION
3 PUMP
ALTERNATE LOW PROFILE CONFIGURATION

PROJECT NO.
R-000265-0XXX-X

TITLE
CITY OF HOUSTON
DESIGN GUIDELINE DRAWINGS
FOR SUBMERSIBLE LIFT STATIONS

CITY OF HOUSTON
DEPARTMENT OF PUBLIC WORKS AND ENGINEERING
ENGINEERING AND CONSTRUCTION

DESIGN ENGINEER TO INCLUDE COH STANDARD TITLE BLOCK ON ALL DRAWINGS, SEE STANDARD TITLE BLOCK DETAIL ON SHEET ZOCOX

REV. NO.	DESCRIPTION	APP'D	DATE

SCALE: XX" = 1'-0"
DESIGNED BY:
DRAWN BY:
SUBMITTED:
DATE:
SURVEY BY:
FIELD BOOK NO.
SHEET NO. OF SHEETS
DWG. NO. F3E01-0516

CADD DWG. FILE NO. : F3E01-3P.DWG

COHSTD.BDR

0 1 2 3 ORIGINAL SCALE IN INCHES FOR REDUCED PLANS

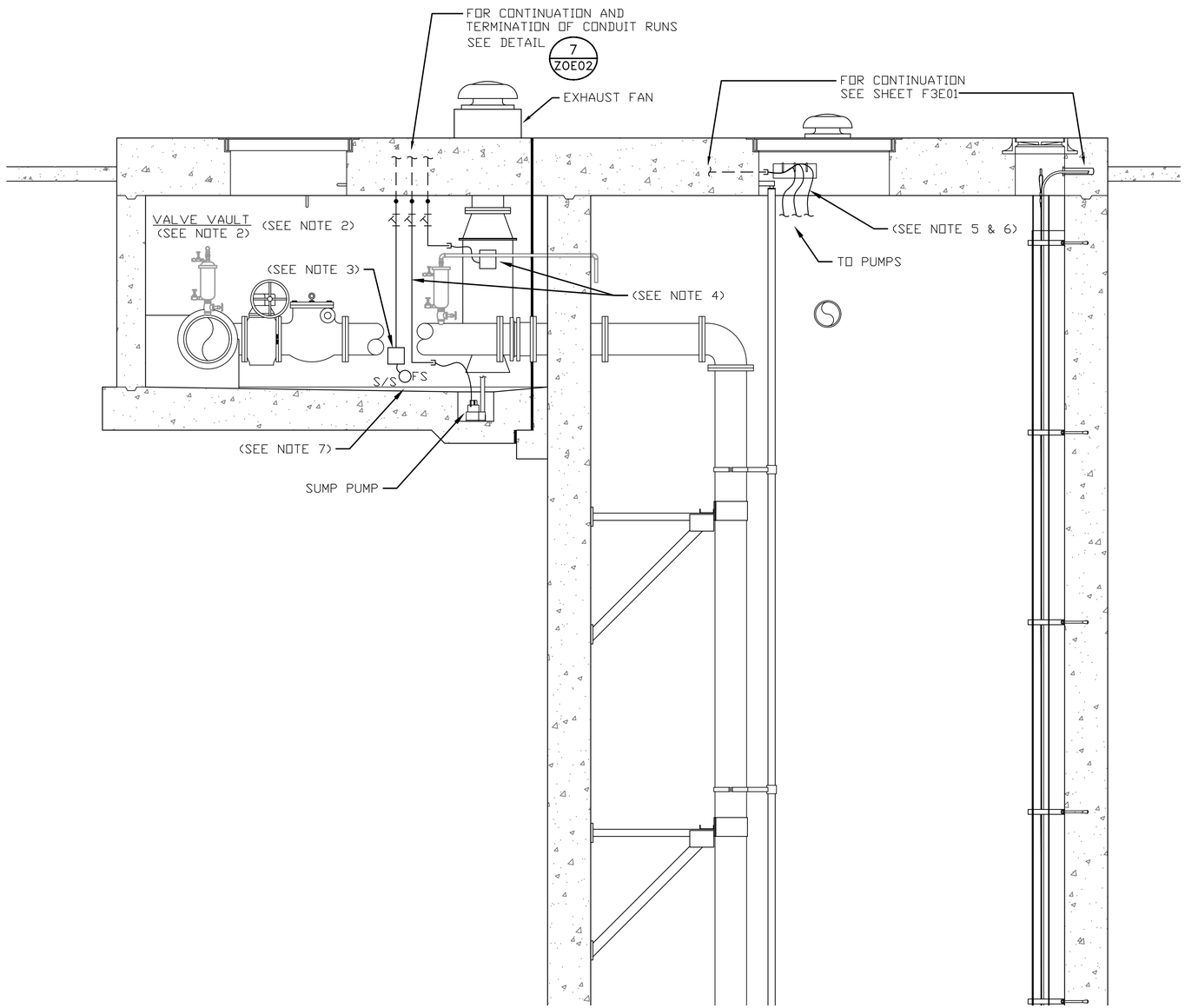

SECTION A F3E01

NOTES TO DESIGN ENGINEER:

A. THESE LIFT STATION DRAWINGS ARE CONSIDERED TO BE DESIGN GUIDELINES FOR THE CONSTRUCTION OF CITY OF HOUSTON WASTEWATER SUBMERSIBLE LIFT STATIONS. THEIR INTENDED USE IS AS A FRAMEWORK FOR THE CONTRACTED DESIGN ENGINEER IN DEVELOPING SPECIFIC LIFT STATION DESIGNS.

IT IS THE RESPONSIBILITY OF THE CONTRACTED DESIGN ENGINEER TO VERIFY THE COMPLETENESS AND ACCURACY OF THE INFORMATION HEREIN CONTAINED AND TO ADJUST ACCORDING TO PROJECT SPECIFIC REQUIREMENTS.

B. THE DESIGN ENGINEER SHALL INCORPORATE ONLY THE NECESSARY STANDARD GUIDELINE DRAWINGS AND DETAILS INTO HIS PROJECT CONTRACT DOCUMENTATION PACKAGE, AND SHALL ADJUST PAGE NUMBERS AND CROSS REFERENCING ACCORDINGLY.

C. THE DESIGN ENGINEER SHALL CONSULT THE CITY OF HOUSTON DESIGN GUIDELINES MANUAL, THE ENGINEERING DESIGN MANUAL, AND THE MASTER SPECIFICATIONS FOR FURTHER INSTRUCTIONS AND INFORMATION PERTINENT TO THESE STANDARD DESIGN GUIDELINE DRAWINGS.

D. THE DESIGN ENGINEER SHALL REMOVE THESE NOTES, ALL REFERENCES TO THESE NOTES, AND ANY OTHER EXTRANEOUS INFORMATION FROM THE DESIGN GUIDELINE DRAWINGS. DESIGN ENGINEER SHALL PROVIDE ANY NOTES OR OTHER APPROPRIATE INFORMATION NECESSARY TO COMPLETE THE LIFT STATION DESIGN.

NOTES:

1. GROUNDING SHALL BE PER N.E.C. MINIMUM REQUIREMENTS.
2. THE ELECTRICAL INSTALLATION WITHIN THE VALVE VAULT SHALL BE EXPLOSION PROOF IN ACCORDANCE WITH ARTICLE 510 OF THE NEC FOR CLASS I, DIVISION 1, GROUP C & D.
3. WHERE JUNCTION BOXES ARE SHOWN, THEY SHALL BE USED FOR PULLING PURPOSES ONLY. SPLICES WILL NOT BE ALLOWED.
4. FOR MOTOR FEEDER AND CONTROL CABLES, INSTALL TYPE CSBE CABLE SEALING FITTING AT JUNCTION BOX ENTRANCE AND EXPLOSION PROOF SEAL IN CONDUITS TO CONTROL BUILDING OR PANEL.
5. TERMINATE PUMP POWER & CONTROL CONDUITS WITH CSBE SEAL. ATTACH STAINLESS STEEL SPLIT SLEEVE CABLE SUPPORT ON EACH POWER AND CONTROL CABLE.
6. ALL PUMP POWER AND CONTROL CABLE LEADS MUST BE THE SAME LENGTH REGARDLESS OF PUMP LOCATION FROM TERMINAL/JUNCTION BOX.
7. FLOAT SWITCH SHOWN IN APPROXIMATE LOCATION. ACTUAL LOCATION SHALL BE ESTABLISHED DURING CONSTRUCTION.

ELEVATION SECTION
3 PUMP CONDUIT ROUTING
ALTERNATE LOW PROFILE CONFIGURATION

PROJECT NO.
R-000265-0XXX-X

TITLE
CITY OF HOUSTON
DESIGN GUIDELINE DRAWINGS
FOR SUBMERSIBLE LIFT STATIONS

CITY OF HOUSTON
DEPARTMENT OF PUBLIC WORKS AND ENGINEERING
ENGINEERING AND CONSTRUCTION

DESIGN ENGINEER TO INCLUDE COH STANDARD TITLE BLOCK ON ALL DRAWINGS, SEE STANDARD TITLE BLOCK DETAIL ON SHEET Z0C0X

REV. NO.	DESCRIPTION	APP'D	DATE

SCALE: XX" = 1'-0"
SUBMITTED:
DATE:
SURVEY BY:
FIELD BOOK NO.
DESIGNED BY:
DRAWN BY:
SHEET NO. OF SHEETS
DWG. NO. F3E02-0516

CADD DWG. FILE NO. : F3E02-3P.DWG

COHSTD.BDR

0 1 2 3 ORIGINAL SCALE IN INCHES FOR REDUCED PLANS

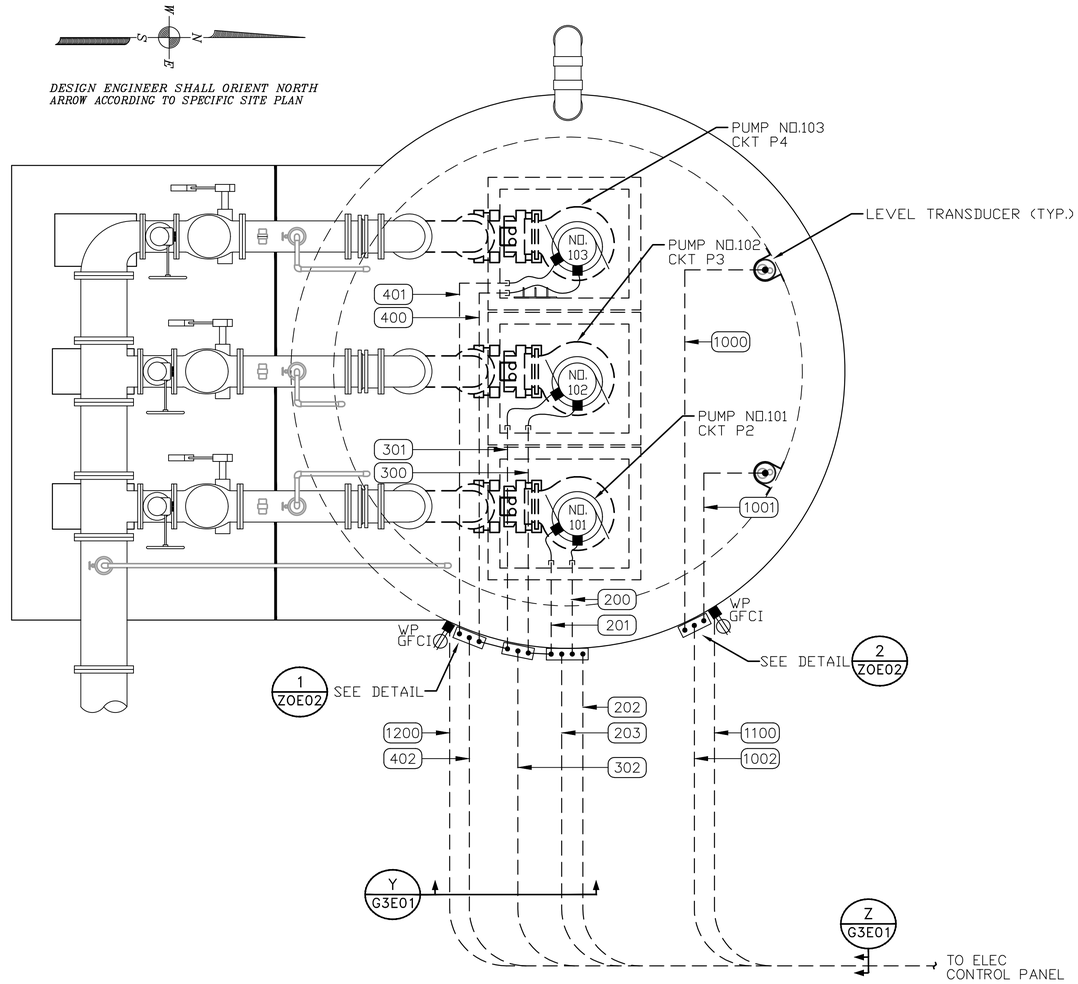

LIFT STATION PLAN

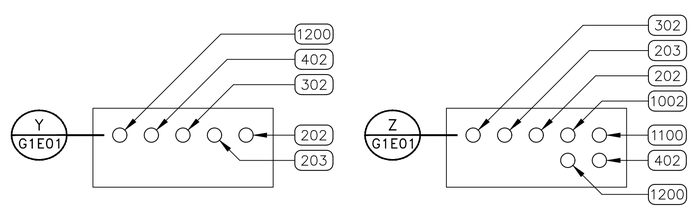

DUCTBANK SECTIONS

NOTES TO DESIGN ENGINEER:

A. THESE LIFT STATION DRAWINGS ARE CONSIDERED TO BE DESIGN GUIDELINES FOR THE CONSTRUCTION OF CITY OF HOUSTON WASTEWATER SUBMERSIBLE LIFT STATIONS. THEIR INTENDED USE IS AS A FRAMEWORK FOR THE CONTRACTED DESIGN ENGINEER IN DEVELOPING SPECIFIC LIFT STATION DESIGNS.

IT IS THE RESPONSIBILITY OF THE CONTRACTED DESIGN ENGINEER TO VERIFY THE COMPLETENESS AND ACCURACY OF THE INFORMATION HEREIN CONTAINED AND TO ADJUST ACCORDING TO PROJECT SPECIFIC REQUIREMENTS.

B. THE DESIGN ENGINEER SHALL INCORPORATE ONLY THE NECESSARY STANDARD GUIDELINE DRAWINGS AND DETAILS INTO HIS PROJECT CONTRACT DOCUMENTATION PACKAGE, AND SHALL ADJUST PAGE NUMBERS AND CROSS REFERENCING ACCORDINGLY.

C. THE DESIGN ENGINEER SHALL CONSULT THE CITY OF HOUSTON DESIGN GUIDELINES MANUAL, THE ENGINEERING DESIGN MANUAL, AND THE MASTER SPECIFICATIONS FOR FURTHER INSTRUCTIONS AND INFORMATION PERTINENT TO THESE STANDARD DESIGN GUIDELINE DRAWINGS.

D. THE DESIGN ENGINEER SHALL REMOVE THESE NOTES, ALL REFERENCES TO THESE NOTES, AND ANY OTHER EXTRANEOUS INFORMATION FROM THE DESIGN GUIDELINE DRAWINGS. DESIGN ENGINEER SHALL PROVIDE ANY NOTES OR OTHER APPROPRIATE INFORMATION NECESSARY TO COMPLETE THE LIFT STATION DESIGN.

NOTES:

1. GROUNDING SHALL BE PER N.E.C. MINIMIUM REQUIREMENTS.
2. THE ELECTRICAL INSTALLATION WITHIN THE WET WELL SHALL BE EXPLOSION PROOF IN ACCORDANCE WITH ARTICLE 510 OF THE NEC FOR CLASS I, DIVISION 1, GROUP C & D.
3. WHERE JUNCTION BOXES ARE SHOWN, THEY SHALL BE USED FOR PULLING OR TERMINATION PURPOSES ONLY. SPLICES WILL NOT BE ALLOWED EXCEPT AS PROVIDED BY NOTE 4 AND AT LIGHTING AND RECEPTACLE TERMINATIONS.
4. FOR MOTOR FEEDER AND CONTROL CABLES, INSTALL TYPE CSBE CABLE SEALING FITTING AT JUNCTION BOX ENTRANCE AND EXPLOSION PROOF SEAL IN CONDUITS TO CONTROL BUILDING OR PANEL.
5. TERMINATE PUMP POWER & CONTROL CONDUITS WITH CSBE SEAL. ATTACH STAINLESS STEEL SPLIT SLEEVE CABLE SUPPORT ON EACH POWER AND CONTROL CABLE.
6. ALL PUMP POWER AND CONTROL CABLE LEADS MUST BE THE SAME LENGTH REGARDLESS OF PUMP LOCATION FROM TERMINAL/JUNCTION BOX.
7. LEVEL TRANSMITTERS SHOWN IN APPROXIMATE LOCATION ACTUAL LOCATION SHALL BE OPPOSITE SIDE OF INLET PIPE.

CONDUIT LAYOUT FOR LIFT STATION
3 PUMP
ALTERNATE HIGH PROFILE CONFIGURATION

PROJECT NO. R-000265-0XXX-X

TITLE CITY OF HOUSTON
DESIGN GUIDELINE DRAWINGS
FOR SUBMERSIBLE LIFT STATIONS

CITY OF HOUSTON
DEPARTMENT OF PUBLIC WORKS AND ENGINEERING
ENGINEERING AND CONSTRUCTION

DESIGN ENGINEER TO INCLUDE COH STANDARD TITLE BLOCK ON ALL DRAWINGS, SEE STANDARD TITLE BLOCK DETAIL ON SHEET Z0C0X

REV. NO.	DESCRIPTION	APP'D	DATE

SCALE: XX" = 1'-0"
SUBMITTED:
DATE:
SURVEY BY:
FIELD BOOK NO.
DESIGNED BY:
DRAWN BY:
SHEET NO. OF SHEETS
DWG. NO. G1E01-0516

CADD DWG. FILE NO. : G1E01-3P.DWG

COHSTD.BDR

0 1 2 3 ORIGINAL SCALE IN INCHES FOR REDUCED PLANS

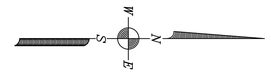

DESIGN ENGINEER SHALL ORIENT NORTH ARROW ACCORDING TO SPECIFIC SITE PLAN

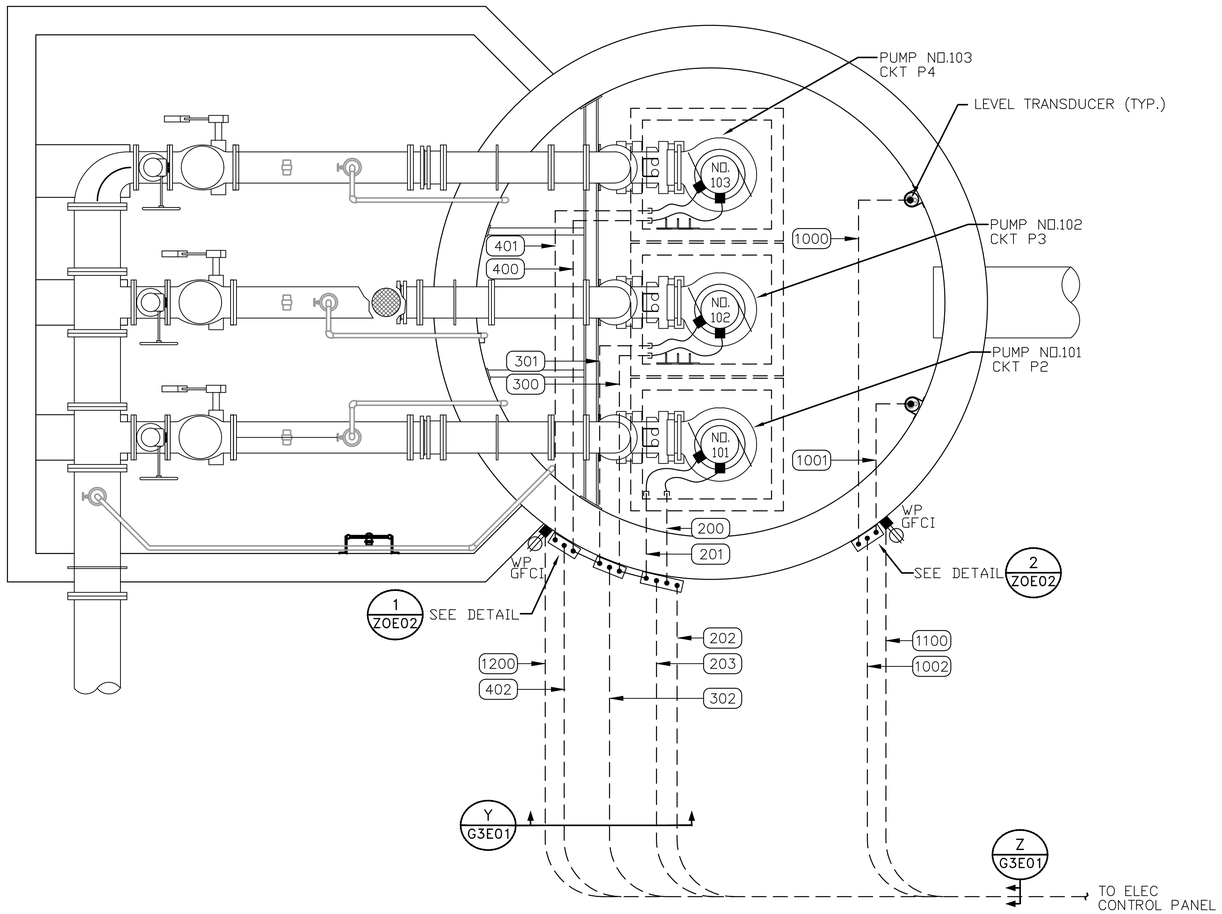

LIFT STATION PLAN

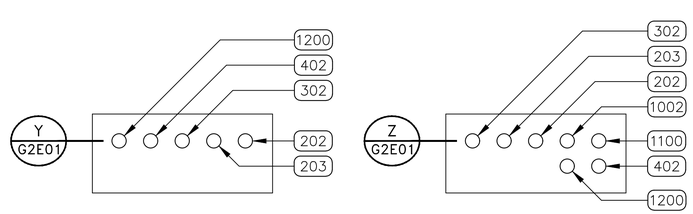

DUCTBANK SECTIONS

NOTES TO DESIGN ENGINEER:

A. THESE LIFT STATION DRAWINGS ARE CONSIDERED TO BE DESIGN GUIDELINES FOR THE CONSTRUCTION OF CITY OF HOUSTON WASTEWATER SUBMERSIBLE LIFT STATIONS. THEIR INTENDED USE IS AS A FRAMEWORK FOR THE CONTRACTED DESIGN ENGINEER IN DEVELOPING SPECIFIC LIFT STATION DESIGNS.

IT IS THE RESPONSIBILITY OF THE CONTRACTED DESIGN ENGINEER TO VERIFY THE COMPLETENESS AND ACCURACY OF THE INFORMATION HEREIN CONTAINED AND TO ADJUST ACCORDING TO PROJECT SPECIFIC REQUIREMENTS.

B. THE DESIGN ENGINEER SHALL INCORPORATE ONLY THE NECESSARY STANDARD GUIDELINE DRAWINGS AND DETAILS INTO HIS PROJECT CONTRACT DOCUMENTATION PACKAGE, AND SHALL ADJUST PAGE NUMBERS AND CROSS REFERENCING ACCORDINGLY.

C. THE DESIGN ENGINEER SHALL CONSULT THE CITY OF HOUSTON DESIGN GUIDELINES MANUAL, THE ENGINEERING DESIGN MANUAL, AND THE MASTER SPECIFICATIONS FOR FURTHER INSTRUCTIONS AND INFORMATION PERTINENT TO THESE STANDARD DESIGN GUIDELINE DRAWINGS.

D. THE DESIGN ENGINEER SHALL REMOVE THESE NOTES, ALL REFERENCES TO THESE NOTES, AND ANY OTHER EXTRANEOUS INFORMATION FROM THE DESIGN GUIDELINE DRAWINGS. DESIGN ENGINEER SHALL PROVIDE ANY NOTES OR OTHER APPROPRIATE INFORMATION NECESSARY TO COMPLETE THE LIFT STATION DESIGN.

NOTES:

1. GROUNDING SHALL BE PER N.E.C. MINIMIUM REQUIREMENTS.
2. THE ELECTRICAL INSTALLATION WITHIN THE WET WELL SHALL BE EXPLOSION PROOF IN ACCORDANCE WITH ARTICLE 510 OF THE NEC FOR CLASS I, DIVISION 1, GROUP C & D.
3. WHERE JUNCTION BOXES ARE SHOWN, THEY SHALL BE USED FOR PULLING OR TERMINATION PURPOSES ONLY. SPLICES WILL NOT BE ALLOWED EXCEPT AS PROVIDED BY NOTE 4 AND AT LIGHTING AND RECEPTACLE TERMINATIONS.
4. FOR MOTOR FEEDER AND CONTROL CABLES, INSTALL TYPE CSBE CABLE SEALING FITTING AT JUNCTION BOX ENTRANCE AND EXPLOSION PROOF SEAL IN CONDUITS TO CONTROL BUILDING OR PANEL.
5. TERMINATE PUMP POWER & CONTROL CONDUITS WITH CSBE SEAL. ATTACH STAINLESS STEEL SPLIT SLEEVE CABLE SUPPORT ON EACH POWER AND CONTROL CABLE.
6. ALL PUMP POWER AND CONTROL CABLE LEADS MUST BE THE SAME LENGTH REGARDLESS OF PUMP LOCATION FROM TERMINAL/JUNCTION BOX.
7. LEVEL TRANSMITTERS SHOWN IN APPROXIMATE LOCATION ACTUAL LOCATION SHALL BE OPPOSITE SIDE OF INLET PIPE.

CONDUIT LAYOUT FOR LIFT STATION
3 PUMP
PREFFERED LOW PROFILE CONFIGURATION

PROJECT NO. R-000265-0XXX-X

TITLE CITY OF HOUSTON
DESIGN GUIDELINE DRAWINGS
FOR SUBMERSIBLE LIFT STATIONS

CITY OF HOUSTON
DEPARTMENT OF PUBLIC WORKS AND ENGINEERING
ENGINEERING AND CONSTRUCTION

DESIGN ENGINEER TO INCLUDE COH STANDARD TITLE BLOCK ON ALL DRAWINGS, SEE STANDARD TITLE BLOCK DETAIL ON SHEET ZOCOX

REV. NO.	DESCRIPTION	APP'D	DATE

SCALE: XX" = 1'-0"
SUBMITTED:
DATE:
SURVEY BY:
FIELD BOOK NO.
DESIGNED BY:
DRAWN BY:
SHEET NO. OF SHEETS
DWG. NO. G2E01-0516

CADD DWG. FILE NO. : G2E01-3P.DWG

COHSTD.BDR

0 1 2 3 ORIGINAL SCALE IN INCHES FOR REDUCED PLANS

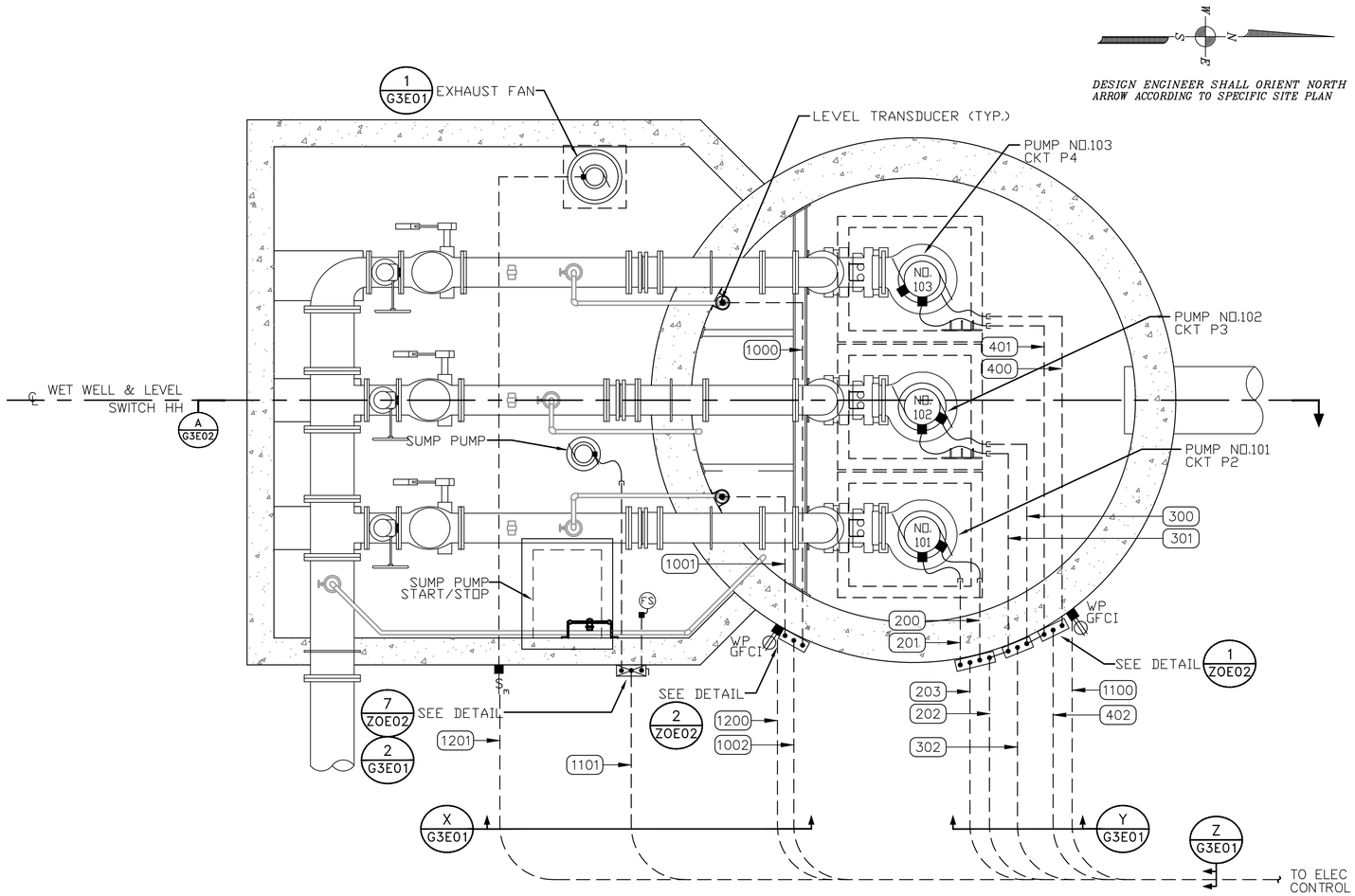

LIFT STATION PLAN

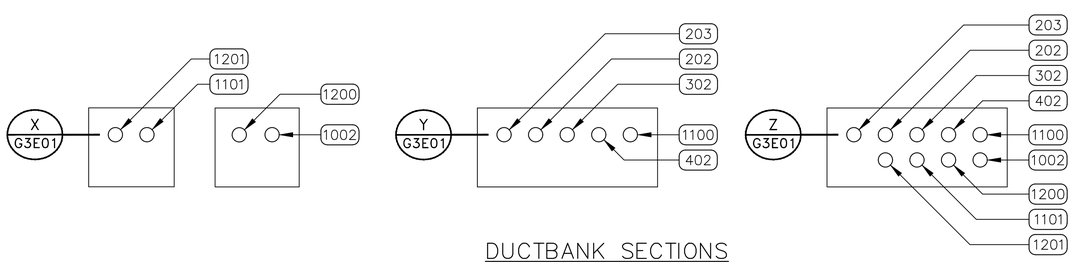

DUCTBANK SECTIONS

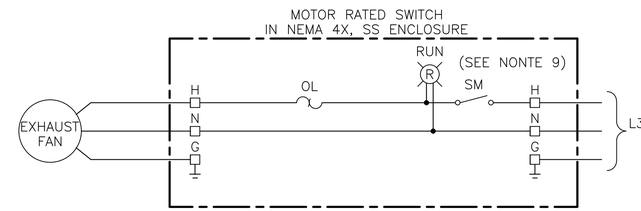

EXHAUST FAN

SCHEMATIC 1 G3E01
(SEE NOTE 9)

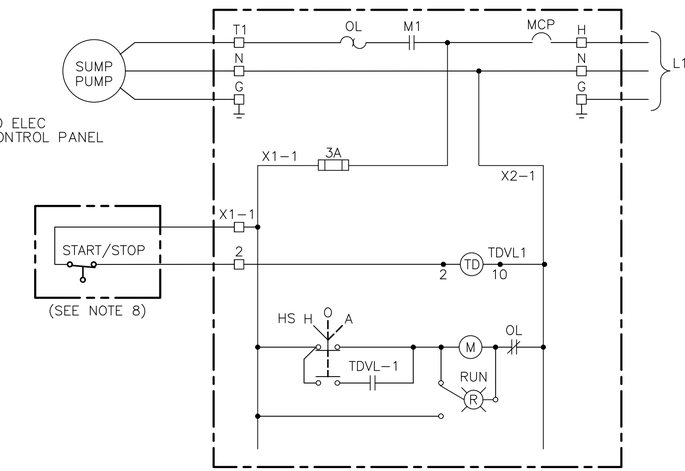

NEMA 4X SS COMBINATION MOTOR STARTER
SIZE 1, 120V, 1PH-3W

SUMP PUMP

SCHEMATIC 2 G3E01

NOTES TO DESIGN ENGINEER:

A. THESE LIFT STATION DRAWINGS ARE CONSIDERED TO BE DESIGN GUIDELINES FOR THE CONSTRUCTION OF CITY OF HOUSTON WASTEWATER SUBMERSIBLE LIFT STATIONS. THEIR INTENDED USE IS AS A FRAMEWORK FOR THE CONTRACTED DESIGN ENGINEER IN DEVELOPING SPECIFIC LIFT STATION DESIGNS.

IT IS THE RESPONSIBILITY OF THE CONTRACTED DESIGN ENGINEER TO VERIFY THE COMPLETENESS AND ACCURACY OF THE INFORMATION HEREIN CONTAINED AND TO ADJUST ACCORDING TO PROJECT SPECIFIC REQUIREMENTS.

B. THE DESIGN ENGINEER SHALL INCORPORATE ONLY THE NECESSARY STANDARD GUIDELINE DRAWINGS AND DETAILS INTO HIS PROJECT CONTRACT DOCUMENTATION PACKAGE, AND SHALL ADJUST PAGE NUMBERS AND CROSS REFERENCING ACCORDINGLY.

C. THE DESIGN ENGINEER SHALL CONSULT THE CITY OF HOUSTON DESIGN GUIDELINES MANUAL, THE ENGINEERING DESIGN MANUAL, AND THE MASTER SPECIFICATIONS FOR FURTHER INSTRUCTIONS AND INFORMATION PERTINENT TO THESE STANDARD DESIGN GUIDELINE DRAWINGS.

D. THE DESIGN ENGINEER SHALL REMOVE THESE NOTES, ALL REFERENCES TO THESE NOTES, AND ANY OTHER EXTRANEOUS INFORMATION FROM THE DESIGN GUIDELINE DRAWINGS. DESIGN ENGINEER SHALL PROVIDE ANY NOTES OR OTHER APPROPRIATE INFORMATION NECESSARY TO COMPLETE THE LIFT STATION DESIGN.

NOTES:

1. GROUNDING SHALL BE PER N.E.C. MINIMIUM REQUIREMENTS.
2. THE ELECTRICAL INSTALLATION WITHIN THE WET WELL SHALL BE EXPLOSION PROOF IN ACCORDANCE WITH ARTICLE 510 OF THE NEC FOR CLASS I, DIVISION 1, GROUP C & D.
3. WHERE JUNCTION BOXES ARE SHOWN, THEY SHALL BE USED FOR PULLING OR TERMINATION PURPOSES ONLY. SPLICES WILL NOT BE ALLOWED EXCEPT AS PROVIDED BY NOTE 4 AND AT LIGHTING AND RECEPTACLE TERMINATIONS.
4. FOR MOTOR FEEDER AND CONTROL CABLES, INSTALL TYPE CSBE CABLE SEALING FITTING AT JUNCTION BOX ENTRANCE AND EXPLOSION PROOF SEAL IN CONDUITS TO CONTROL BUILDING OR PANEL.
5. TERMINATE PUMP POWER & CONTROL CONDUITS WITH CSBE SEAL. ATTACH STAINLESS STEEL SPLIT SLEEVE CABLE SUPPORT ON EACH POWER AND CONTROL CABLE.
6. ALL PUMP POWER AND CONTROL CABLE LEADS MUST BE THE SAME LENGTH REGARDLESS OF PUMP LOCATION FROM TERMINAL/JUNCTION BOX.
7. LEVEL TRANSMITTERS SHOWN IN APPROXIMATE LOCATION ACTUAL LOCATION SHALL BE OPPOSITE SIDE OF INLET PIPE.
8. FLOAT SWITCH WITH CABLE LENGTH SHALL BE AS REQUIREDTO PROVIDE CONTINUIOUS RUN TO MOTOR STARTER.
9. MOTOR RATED SWITCH SIZE SHALL BE PER NAMEPLATE RATING OF MOTOR.

CONDUIT LAYOUT FOR LIFT STATION
3 PUMP
ALTERNATE LOW PROFILE CONFIGURATION

PROJECT NO. R-000265-0XXX-X

TITLE CITY OF HOUSTON
DESIGN GUIDELINE DRAWINGS
FOR SUBMERSIBLE LIFT STATIONS

CITY OF HOUSTON
DEPARTMENT OF PUBLIC WORKS AND ENGINEERING
ENGINEERING AND CONSTRUCTION

DESIGN ENGINEER TO INCLUDE COH STANDARD TITLE BLOCK ON ALL DRAWINGS, SEE STANDARD TITLE BLOCK DETAIL ON SHEET Z0COX

REV. NO.	DESCRIPTION	APP'D	DATE

SCALE: XX" = 1'-0"
SUBMITTED:
DATE:
SURVEY BY:
FIELD BOOK NO.
DESIGNED BY:
DRAWN BY:
SHEET NO. OF SHEETS
DWG. NO. G3E01-0516

CADD DWG. FILE NO. : G3E01-3P.DWG

COHSTD.BDR

0 1 2 3 ORIGINAL SCALE IN INCHES FOR REDUCED PLANS

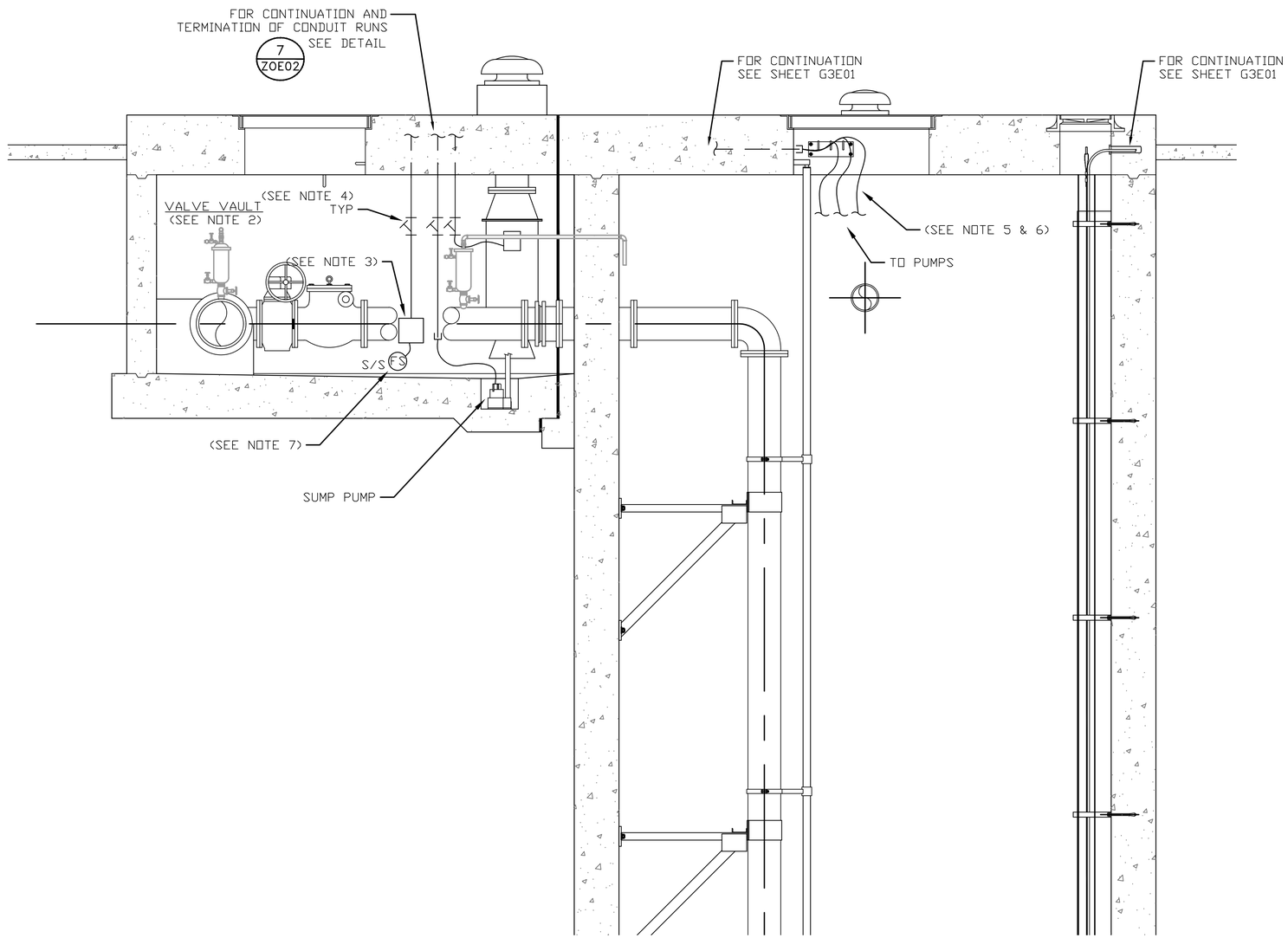

SECTION A G3E01

NOTES TO DESIGN ENGINEER:

A. THESE LIFT STATION DRAWINGS ARE CONSIDERED TO BE DESIGN GUIDELINES FOR THE CONSTRUCTION OF CITY OF HOUSTON WASTEWATER SUBMERSIBLE LIFT STATIONS. THEIR INTENDED USE IS AS A FRAMEWORK FOR THE CONTRACTED DESIGN ENGINEER IN DEVELOPING SPECIFIC LIFT STATION DESIGNS.

IT IS THE RESPONSIBILITY OF THE CONTRACTED DESIGN ENGINEER TO VERIFY THE COMPLETENESS AND ACCURACY OF THE INFORMATION HEREIN CONTAINED AND TO ADJUST ACCORDING TO PROJECT SPECIFIC REQUIREMENTS.

B. THE DESIGN ENGINEER SHALL INCORPORATE ONLY THE NECESSARY STANDARD GUIDELINE DRAWINGS AND DETAILS INTO HIS PROJECT CONTRACT DOCUMENTATION PACKAGE, AND SHALL ADJUST PAGE NUMBERS AND CROSS REFERENCING ACCORDINGLY.

C. THE DESIGN ENGINEER SHALL CONSULT THE CITY OF HOUSTON DESIGN GUIDELINES MANUAL, THE ENGINEERING DESIGN MANUAL, AND THE MASTER SPECIFICATIONS FOR FURTHER INSTRUCTIONS AND INFORMATION PERTINENT TO THESE STANDARD DESIGN GUIDELINE DRAWINGS.

D. THE DESIGN ENGINEER SHALL REMOVE THESE NOTES, ALL REFERENCES TO THESE NOTES, AND ANY OTHER EXTRANEOUS INFORMATION FROM THE DESIGN GUIDELINE DRAWINGS. DESIGN ENGINEER SHALL PROVIDE ANY NOTES OR OTHER APPROPRIATE INFORMATION NECESSARY TO COMPLETE THE LIFT STATION DESIGN.

NOTES:

1. GROUNDING SHALL BE PER N.E.C. MINIMIUM REQUIREMENTS.
2. THE ELECTRICAL INSTALLATION WITHIN THE WET WELL SHALL BE EXPLOSION PROOF IN ACCORDANCE WITH ARTICLE 510 OF THE NEC FOR CLASS I, DIVISION 1, GROUP C & D.
3. WHERE JUNCTION BOXES ARE SHOWN, THEY SHALL BE USED FOR PULLING PURPOSES ONLY. SPLICES WILL NOT BE ALLOWED EXCEPT AS
4. FOR MOTOR FEEDER AND CONTROL CABLES, INSTALL TYPE CSBE CABLE SEALING FITTING AT JUNCTION BOX ENTRANCE AND EXPLOSION PROOF SEAL IN CONDUITS TO CONTROL BUILDING OR PANEL.
5. TERMINATE PUMP POWER & CONTROL CONDUITS WITH CSBE SEAL. ATTACH STAINLESS STEEL SPLIT SLEEVE CABLE SUPPORT ON EACH POWER AND CONTROL CABLE.
6. ALL PUMP POWER AND CONTROL CABLE LEADS MUST BE THE SAME LENGTH REGARDLESS OF PUMP LOCATION FROM TERMINAL/JUNCTION BOX.
7. FLOAT SWITCH WITH CABLE LENGTH SHALL BE AS REQUIREDTO PROVIDE CONTINUIOUS RUN TO MOTOR STARTER.

ELEVATION SECTION
3 PUMP CONDUIT ROUTING
ALTERNATE LOW PROFILE CONFIGURATION

PROJECT NO.
R-000265-0XXX-X

TITLE
CITY OF HOUSTON
DESIGN GUIDELINE DRAWINGS
FOR SUBMERSIBLE LIFT STATIONS

CITY OF HOUSTON
DEPARTMENT OF PUBLIC WORKS AND ENGINEERING
ENGINEERING AND CONSTRUCTION

DESIGN ENGINEER TO INCLUDE COH STANDARD TITLE BLOCK ON ALL DRAWINGS, SEE STANDARD TITLE BLOCK DETAIL ON SHEET Z0COX

REV. NO.	DESCRIPTION	APP'D	DATE

SCALE: XX" = 1'-0"
SUBMITTED:
DATE:
SURVEY BY:
FIELD BOOK NO.
DESIGNED BY:
DRAWN BY:
SHEET NO. OF SHEETS
DWG. NO. G3E02-0516

CADD DWG. FILE NO. : G3E02-3P.DWG

COHSTD.BDR

0 1 2 3 ORIGINAL SCALE IN INCHES FOR REDUCED PLANS

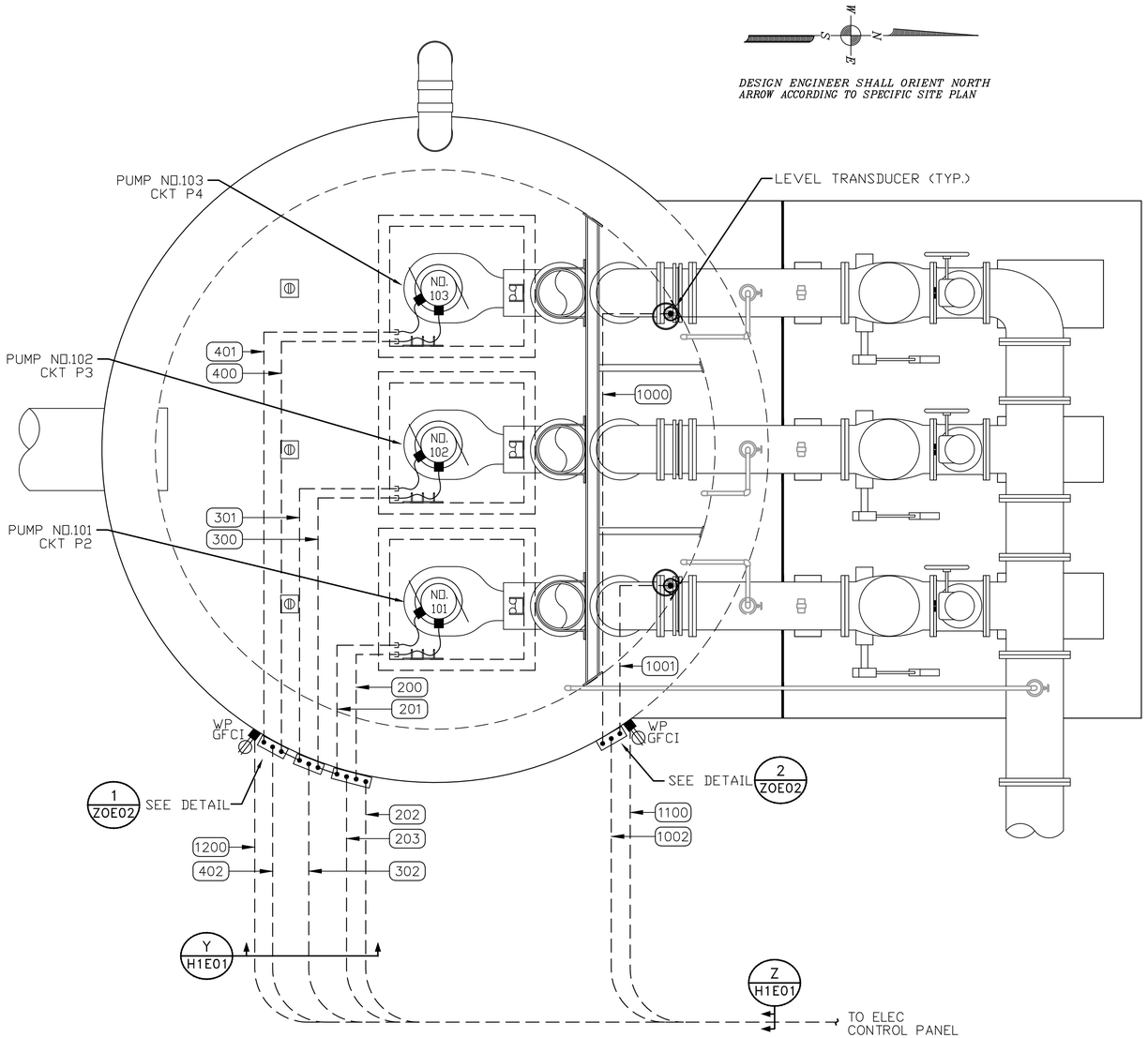

LIFT STATION PLAN

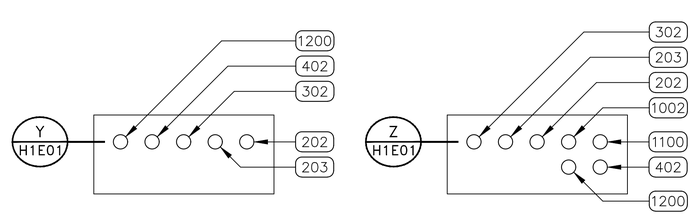

DUCTBANK SECTIONS

NOTES TO DESIGN ENGINEER:

A. THESE LIFT STATION DRAWINGS ARE CONSIDERED TO BE DESIGN GUIDELINES FOR THE CONSTRUCTION OF CITY OF HOUSTON WASTEWATER SUBMERSIBLE LIFT STATIONS. THEIR INTENDED USE IS AS A FRAMEWORK FOR THE CONTRACTED DESIGN ENGINEER IN DEVELOPING SPECIFIC LIFT STATION DESIGNS.

IT IS THE RESPONSIBILITY OF THE CONTRACTED DESIGN ENGINEER TO VERIFY THE COMPLETENESS AND ACCURACY OF THE INFORMATION HEREIN CONTAINED AND TO ADJUST ACCORDING TO PROJECT SPECIFIC REQUIREMENTS.

B. THE DESIGN ENGINEER SHALL INCORPORATE ONLY THE NECESSARY STANDARD GUIDELINE DRAWINGS AND DETAILS INTO HIS PROJECT CONTRACT DOCUMENTATION PACKAGE, AND SHALL ADJUST PAGE NUMBERS AND CROSS REFERENCING ACCORDINGLY.

C. THE DESIGN ENGINEER SHALL CONSULT THE CITY OF HOUSTON DESIGN GUIDELINES MANUAL, THE ENGINEERING DESIGN MANUAL, AND THE MASTER SPECIFICATIONS FOR FURTHER INSTRUCTIONS AND INFORMATION PERTINENT TO THESE STANDARD DESIGN GUIDELINE DRAWINGS.

D. THE DESIGN ENGINEER SHALL REMOVE THESE NOTES, ALL REFERENCES TO THESE NOTES, AND ANY OTHER EXTRANEOUS INFORMATION FROM THE DESIGN GUIDELINE DRAWINGS. DESIGN ENGINEER SHALL PROVIDE ANY NOTES OR OTHER APPROPRIATE INFORMATION NECESSARY TO COMPLETE THE LIFT STATION DESIGN.

NOTES:

1. GROUNDING SHALL BE PER N.E.C. MINIMIUM REQUIREMENTS.
2. THE ELECTRICAL INSTALLATION WITHIN THE WET WELL SHALL BE EXPLOSION PROOF IN ACCORDANCE WITH ARTICLE 510 OF THE NEC FOR CLASS I, DIVISION 1, GROUP C & D.
3. WHERE JUNCTION BOXES ARE SHOWN, THEY SHALL BE USED FOR PULLING OR TERMINATION PURPOSES ONLY. SPLICES WILL NOT BE ALLOWED EXCEPT AS PROVIDED BY NOTE 4 AND AT LIGHTING AND RECEPTACLE TERMINATIONS.
4. FOR MOTOR FEEDER AND CONTROL CABLES, INSTALL TYPE CSBE CABLE SEALING FITTING AT JUNCTION BOX ENTRANCE AND EXPLOSION PROOF SEAL IN CONDUITS TO CONTROL BUILDING OR PANEL.
5. TERMINATE PUMP POWER & CONTROL CONDUITS WITH CSBE SEAL. ATTACH STAINLESS STEEL SPLIT SLEEVE CABLE SUPPORT ON EACH POWER AND CONTROL CABLE.
6. ALL PUMP POWER AND CONTROL CABLE LEADS MUST BE THE SAME LENGTH REGARDLESS OF PUMP LOCATION FROM TERMINAL/JUNCTION BOX.
7. LEVEL TRANSMITTERS SHOWN IN APPROXIMATE LOCATION. ACTUAL LOCATION SHALL BE OPPOSITE SIDE OF INLET PIPE.

CONDUIT LAYOUT FOR LIFT STATION
3 PUMP
ALTERNATE HIGH PROFILE CONFIGURATION

PROJECT NO.
R-000265-0XXX-X

TITLE
CITY OF HOUSTON
DESIGN GUIDELINE DRAWINGS
FOR SUBMERSIBLE LIFT STATIONS

CITY OF HOUSTON
DEPARTMENT OF PUBLIC WORKS AND ENGINEERING
ENGINEERING AND CONSTRUCTION

DESIGN ENGINEER TO INCLUDE COH STANDARD TITLE BLOCK ON ALL DRAWINGS, SEE STANDARD TITLE BLOCK DETAIL ON SHEET Z0COX

REV. NO.	DESCRIPTION	APP'D	DATE

SCALE: XX" = 1'-0"
SUBMITTED:
DATE:
SURVEY BY:
FIELD BOOK NO.
DESIGNED BY:
DRAWN BY:
SHEET NO. OF SHEETS
DWG. NO.
H1E01-0516

CADD DWG. FILE NO. :
H1E01-3P.DWG

COHSTD.BDR

0 1 2 3
ORIGINAL SCALE IN INCHES FOR REDUCED PLANS

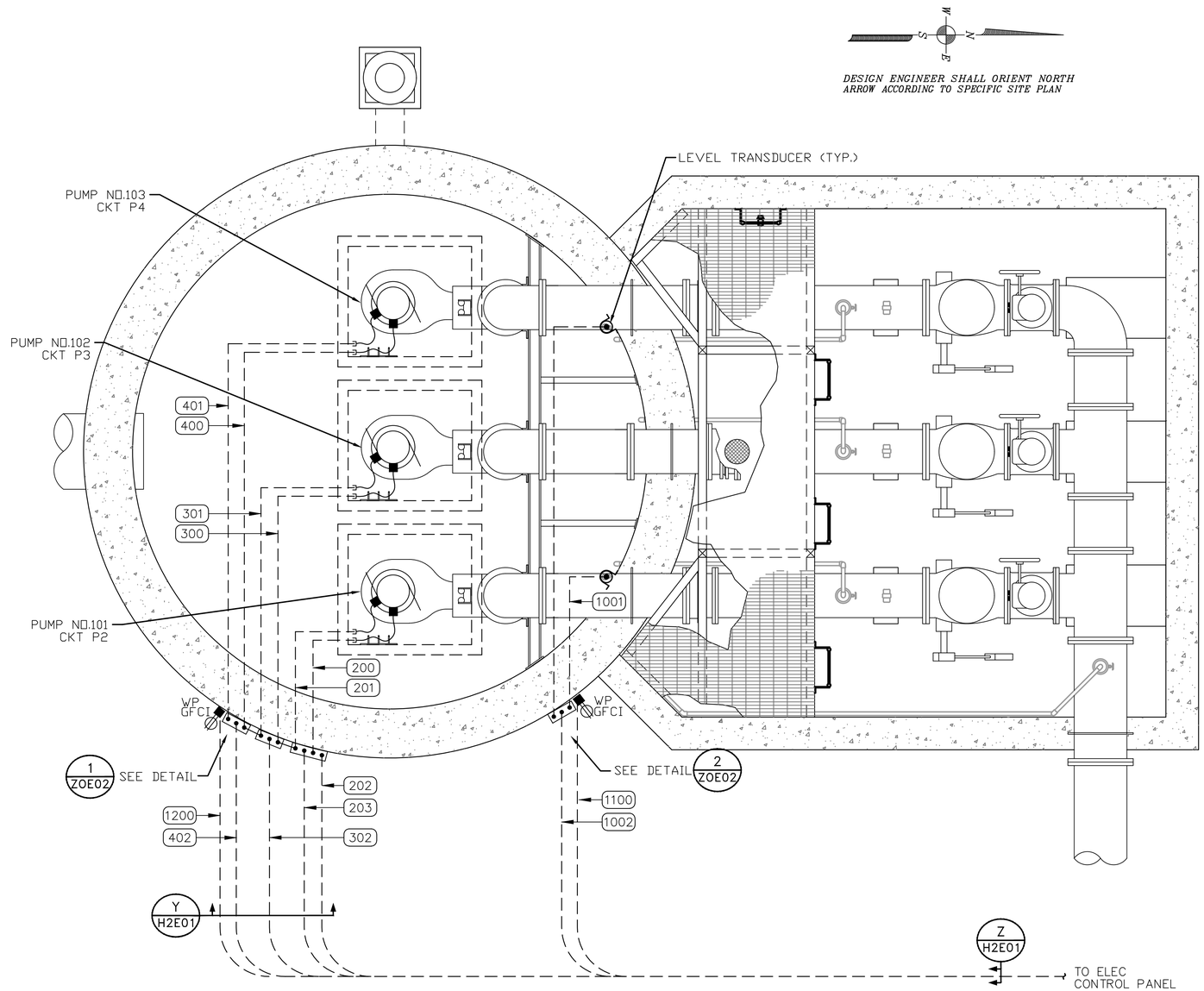

LIFT STATION PLAN

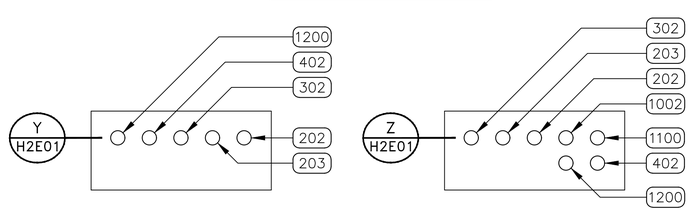

DUCTBANK SECTIONS

NOTES TO DESIGN ENGINEER:

A. THESE LIFT STATION DRAWINGS ARE CONSIDERED TO BE DESIGN GUIDELINES FOR THE CONSTRUCTION OF CITY OF HOUSTON WASTEWATER SUBMERSIBLE LIFT STATIONS. THEIR INTENDED USE IS AS A FRAMEWORK FOR THE CONTRACTED DESIGN ENGINEER IN DEVELOPING SPECIFIC LIFT STATION DESIGNS.

IT IS THE RESPONSIBILITY OF THE CONTRACTED DESIGN ENGINEER TO VERIFY THE COMPLETENESS AND ACCURACY OF THE INFORMATION HEREIN CONTAINED AND TO ADJUST ACCORDING TO PROJECT SPECIFIC REQUIREMENTS.

B. THE DESIGN ENGINEER SHALL INCORPORATE ONLY THE NECESSARY STANDARD GUIDELINE DRAWINGS AND DETAILS INTO HIS PROJECT CONTRACT DOCUMENTATION PACKAGE, AND SHALL ADJUST PAGE NUMBERS AND CROSS REFERENCING ACCORDINGLY.

C. THE DESIGN ENGINEER SHALL CONSULT THE CITY OF HOUSTON DESIGN GUIDELINES MANUAL, THE ENGINEERING DESIGN MANUAL, AND THE MASTER SPECIFICATIONS FOR FURTHER INSTRUCTIONS AND INFORMATION PERTINENT TO THESE STANDARD DESIGN GUIDELINE DRAWINGS.

D. THE DESIGN ENGINEER SHALL REMOVE THESE NOTES, ALL REFERENCES TO THESE NOTES, AND ANY OTHER EXTRANEOUS INFORMATION FROM THE DESIGN GUIDELINE DRAWINGS. DESIGN ENGINEER SHALL PROVIDE ANY NOTES OR OTHER APPROPRIATE INFORMATION NECESSARY TO COMPLETE THE LIFT STATION DESIGN.

NOTES:

1. GROUNDING SHALL BE PER N.E.C. MINIMIUM REQUIREMENTS.
2. THE ELECTRICAL INSTALLATION WITHIN THE WET WELL SHALL BE EXPLOSION PROOF IN ACCORDANCE WITH ARTICLE 510 OF THE NEC FOR CLASS I, DIVISION 1, GROUP C & D.
3. WHERE JUNCTION BOXES ARE SHOWN, THEY SHALL BE USED FOR PULLING OR TERMINATION PURPOSES ONLY. SPLICES WILL NOT BE ALLOWED EXCEPT AS PROVIDED BY NOTE 4 AND AT LIGHTING AND RECEPTACLE TERMINATIONS.
4. FOR MOTOR FEEDER AND CONTROL CABLES, INSTALL TYPE CSBE CABLE SEALING FITTING AT JUNCTION BOX ENTRANCE AND EXPLOSION PROOF SEAL IN CONDUITS TO CONTROL BUILDING OR PANEL.
5. TERMINATE PUMP POWER & CONTROL CONDUITS WITH CSBE SEAL. ATTACH STAINLESS STEEL SPLIT SLEEVE CABLE SUPPORT ON EACH POWER AND CONTROL CABLE.
6. ALL PUMP POWER AND CONTROL CABLE LEADS MUST BE THE SAME LENGTH REGARDLESS OF PUMP LOCATION FROM TERMINAL/JUNCTION BOX.
7. LEVEL TRANSMITTERS SHOWN IN APPROXIMATE LOCATION ACTUAL LOCATION SHALL BE OPPOSITE SIDE OF INLET PIPE.

CONDUIT LAYOUT FOR LIFT STATION
3 PUMP
PREFERRED LOW PROFILE CONFIGURATION

PROJECT NO.
R-000265-0XXX-X

TITLE
CITY OF HOUSTON
DESIGN GUIDELINE DRAWINGS
FOR SUBMERSIBLE LIFT STATIONS

CITY OF HOUSTON
DEPARTMENT OF PUBLIC WORKS AND ENGINEERING
ENGINEERING AND CONSTRUCTION

DESIGN ENGINEER TO INCLUDE COH STANDARD TITLE BLOCK ON ALL DRAWINGS, SEE STANDARD TITLE BLOCK DETAIL ON SHEET Z0C0X

REV. NO.	DESCRIPTION	APP'D	DATE

SCALE: XX" = 1'-0"
SUBMITTED:
DATE:
SURVEY BY:
FIELD BOOK NO.
DESIGNED BY:
DRAWN BY:
SHEET NO. OF SHEETS
DWG. NO.
H2E01-0516

CADD DWG. FILE NO. :
H2E01-3P.DWG

COHSTD.BDR

0 1 2 3
ORIGINAL SCALE IN INCHES FOR REDUCED PLANS

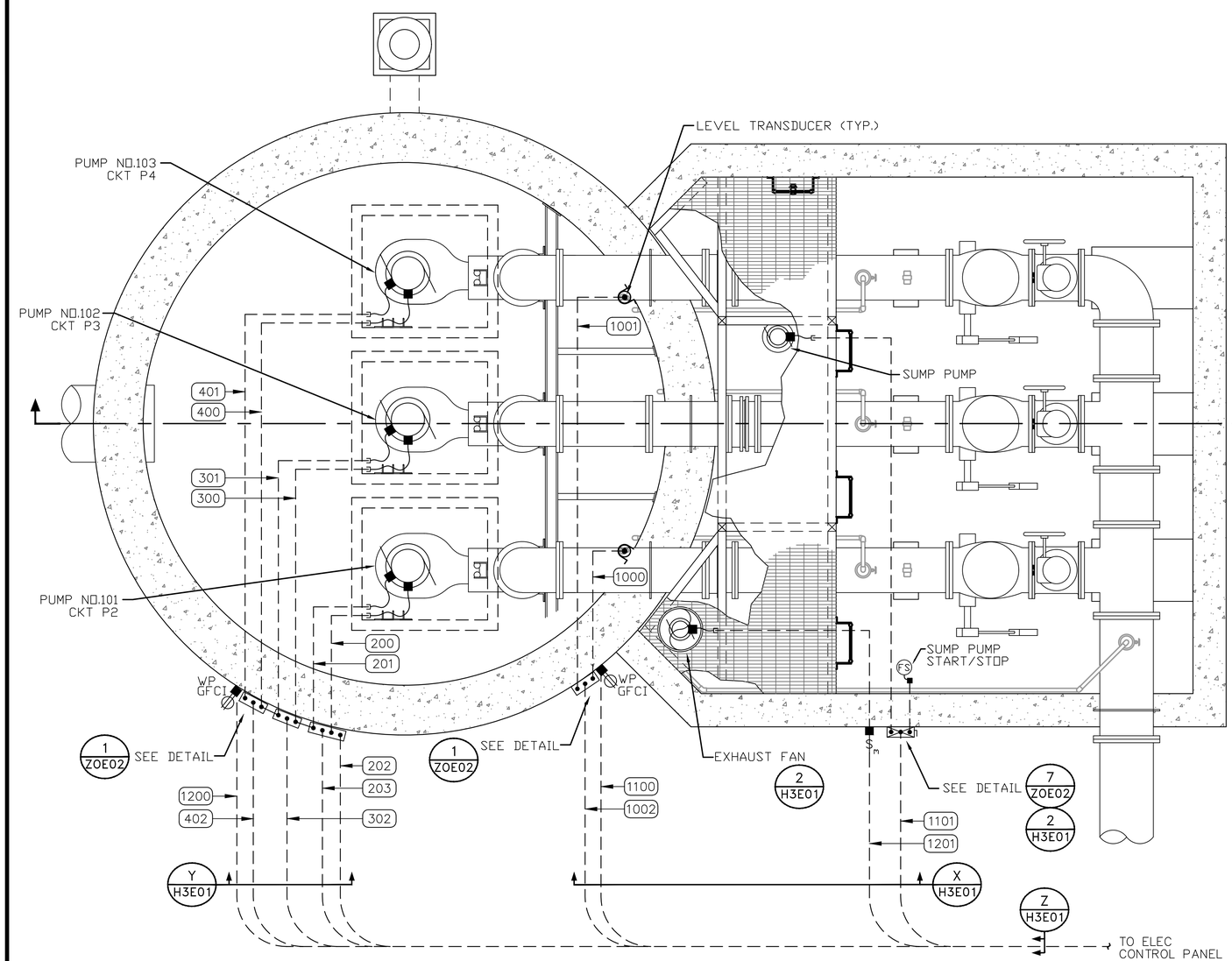

LIFT STATION PLAN

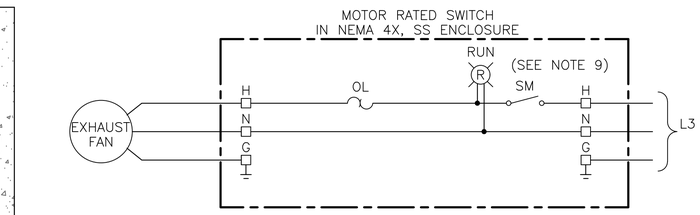

EXHAUST FAN

A
H3E02
WET WELL & LEVEL
SWITCH HH

SCHEMATIC 1 H3E01
(SEE NOTE 9)

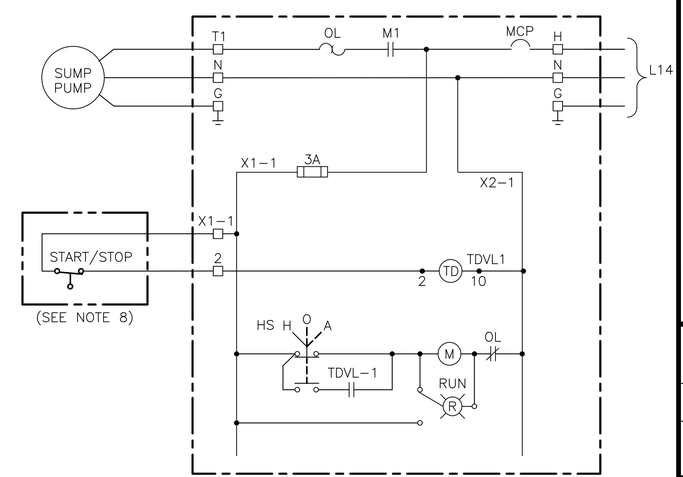

NEMA 4X SS COMBINATION MOTOR STARTER
SIZE 1, 120V, 1PH-3W

SUMP PUMP

SCHEMATIC 2 H3E01

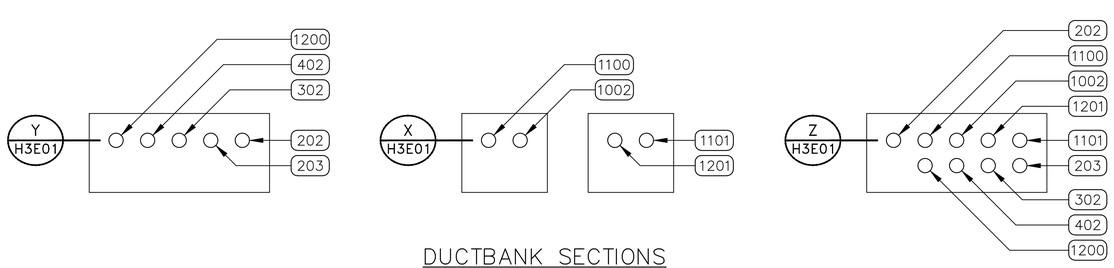

DUCTBANK SECTIONS

NOTES TO DESIGN ENGINEER:

A. THESE LIFT STATION DRAWINGS ARE CONSIDERED TO BE DESIGN GUIDELINES FOR THE CONSTRUCTION OF CITY OF HOUSTON WASTEWATER SUBMERSIBLE LIFT STATIONS. THEIR INTENDED USE IS AS A FRAMEWORK FOR THE CONTRACTED DESIGN ENGINEER IN DEVELOPING SPECIFIC LIFT STATION DESIGNS.

IT IS THE RESPONSIBILITY OF THE CONTRACTED DESIGN ENGINEER TO VERIFY THE COMPLETENESS AND ACCURACY OF THE INFORMATION HEREIN CONTAINED AND TO ADJUST ACCORDING TO PROJECT SPECIFIC REQUIREMENTS.

B. THE DESIGN ENGINEER SHALL INCORPORATE ONLY THE NECESSARY STANDARD GUIDELINE DRAWINGS AND DETAILS INTO HIS PROJECT CONTRACT DOCUMENTATION PACKAGE, AND SHALL ADJUST PAGE NUMBERS AND CROSS REFERENCING ACCORDINGLY.

C. THE DESIGN ENGINEER SHALL CONSULT THE CITY OF HOUSTON DESIGN GUIDELINES MANUAL, THE ENGINEERING DESIGN MANUAL, AND THE MASTER SPECIFICATIONS FOR FURTHER INSTRUCTIONS AND INFORMATION PERTINENT TO THESE STANDARD DESIGN GUIDELINE DRAWINGS.

D. THE DESIGN ENGINEER SHALL REMOVE THESE NOTES, ALL REFERENCES TO THESE NOTES, AND ANY OTHER EXTRANEOUS INFORMATION FROM THE DESIGN GUIDELINE DRAWINGS. DESIGN ENGINEER SHALL PROVIDE ANY NOTES OR OTHER APPROPRIATE INFORMATION NECESSARY TO COMPLETE THE LIFT STATION DESIGN.

NOTES:

1. GROUNDING SHALL BE PER N.E.C. MINIMIUM REQUIREMENTS.
2. THE ELECTRICAL INSTALLATION WITHIN THE WET WELL SHALL BE EXPLOSION PROOF IN ACCORDANCE WITH ARTICLE 510 OF THE NEC FOR CLASS I, DIVISION 1, GROUP C & D.
3. WHERE JUNCTION BOXES ARE SHOWN, THEY SHALL BE USED FOR PULLING OR TERMINATION PURPOSES ONLY. SPLICES WILL NOT BE ALLOWED EXCEPT AS PROVIDED BY NOTE 4 AND AT LIGHTING AND RECEPTACLE TERMINATIONS.
4. FOR MOTOR FEEDER AND CONTROL CABLES, INSTALL TYPE CSBE CABLE SEALING FITTING AT JUNCTION BOX ENTRANCE AND EXPLOSION PROOF SEAL IN CONDUITS TO CONTROL BUILDING OR PANEL.
5. TERMINATE PUMP POWER & CONTROL CONDUITS WITH CSBE SEAL. ATTACH STAINLESS STEEL SPLIT SLEEVE CABLE SUPPORT ON EACH POWER AND CONTROL CABLE.
6. ALL PUMP POWER AND CONTROL CABLE LEADS MUST BE THE SAME LENGTH REGARDLESS OF PUMP LOCATION FROM TERMINAL/JUNCTION BOX.
7. LEVEL TRANSMITTERS SHOWN IN APPROXIMATE LOCATION ACTUAL LOCATION SHALL BE OPPOSITE SIDE OF INLET PIPE.
8. FLOAT SWITCH WITH CABLE LENGTH SHALL BE AS REQUIREDTO PROVIDE CONTINUIOUS RUN TO MOTOR STARTER.
9. MOTOR RATED SWITCH SIZE SHALL BE PER NAMEPLATE RATING OF MOTOR.

CONDUIT LAYOUT FOR LIFT STATION
3 PUMP
PREFERRED LOW PROFILE CONFIGURATION

PROJECT NO.
R-000265-0XXX-X

TITLE
CITY OF HOUSTON
DESIGN GUIDELINE DRAWINGS
FOR SUBMERSIBLE LIFT STATIONS

CITY OF HOUSTON
DEPARTMENT OF PUBLIC WORKS AND ENGINEERING
ENGINEERING AND CONSTRUCTION

DESIGN ENGINEER TO INCLUDE COH STANDARD TITLE BLOCK ON ALL DRAWINGS, SEE STANDARD TITLE BLOCK DETAIL ON SHEET Z0COX

REV. NO.	DESCRIPTION	APP'D	DATE

SCALE: XX" = 1'-0"
SUBMITTED:
DATE:
SURVEY BY:
FIELD BOOK NO.
DESIGNED BY:
DRAWN BY:
SHEET NO. OF SHEETS
DWG. NO.
H3E01-0516

CADD DWG. FILE NO. :
H3E01-3P.DWG

COHSTD.BDR

0 1 2 3 ORIGINAL SCALE IN INCHES FOR REDUCED PLANS

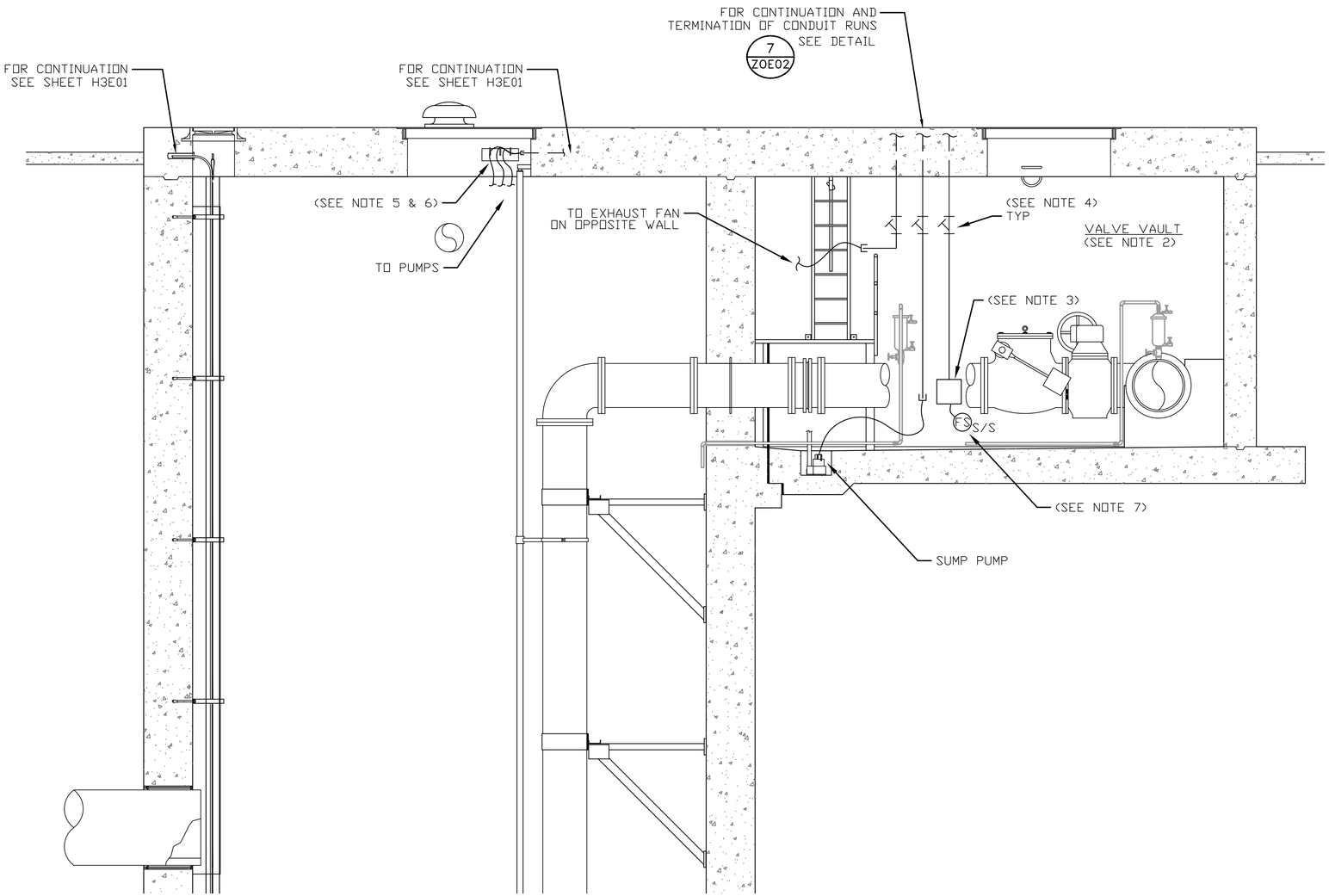

SECTION A H3E01

NOTES TO DESIGN ENGINEER:

A. THESE LIFT STATION DRAWINGS ARE CONSIDERED TO BE DESIGN GUIDELINES FOR THE CONSTRUCTION OF CITY OF HOUSTON WASTEWATER SUBMERSIBLE LIFT STATIONS. THEIR INTENDED USE IS AS A FRAMEWORK FOR THE CONTRACTED DESIGN ENGINEER IN DEVELOPING SPECIFIC LIFT STATION DESIGNS.

IT IS THE RESPONSIBILITY OF THE CONTRACTED DESIGN ENGINEER TO VERIFY THE COMPLETENESS AND ACCURACY OF THE INFORMATION HEREIN CONTAINED AND TO ADJUST ACCORDING TO PROJECT SPECIFIC REQUIREMENTS.

B. THE DESIGN ENGINEER SHALL INCORPORATE ONLY THE NECESSARY STANDARD GUIDELINE DRAWINGS AND DETAILS INTO HIS PROJECT CONTRACT DOCUMENTATION PACKAGE, AND SHALL ADJUST PAGE NUMBERS AND CROSS REFERENCING ACCORDINGLY.

C. THE DESIGN ENGINEER SHALL CONSULT THE CITY OF HOUSTON DESIGN GUIDELINES MANUAL, THE ENGINEERING DESIGN MANUAL, AND THE MASTER SPECIFICATIONS FOR FURTHER INSTRUCTIONS AND INFORMATION PERTINENT TO THESE STANDARD DESIGN GUIDELINE DRAWINGS.

D. THE DESIGN ENGINEER SHALL REMOVE THESE NOTES, ALL REFERENCES TO THESE NOTES, AND ANY OTHER EXTRANEOUS INFORMATION FROM THE DESIGN GUIDELINE DRAWINGS. DESIGN ENGINEER SHALL PROVIDE ANY NOTES OR OTHER APPROPRIATE INFORMATION NECESSARY TO COMPLETE THE LIFT STATION DESIGN.

NOTES:

1. GROUNDING SHALL BE PER N.E.C. MINIMUM REQUIREMENTS.
2. THE ELECTRICAL INSTALLATION WITHIN THE VALVE VAULT SHALL BE EXPLOSION PROOF IN ACCORDANCE WITH ARTICLE 510 OF THE NEC FOR CLASS I, DIVISION 1, GROUP C & D.
3. WHERE JUNCTION BOXES ARE SHOWN, THEY SHALL BE USED FOR PULLING PURPOSES ONLY. SPLICES WILL NOT BE ALLOWED.
4. FOR MOTOR FEEDER AND CONTROL CABLES, INSTALL TYPE CSBE CABLE SEALING FITTING AT JUNCTION BOX ENTRANCE AND EXPLOSION PROOF SEAL IN CONDUITS TO CONTROL BUILDING OR PANEL.
5. TERMINATE PUMP POWER & CONTROL CONDUITS WITH CSBE SEAL. ATTACH STAINLESS STEEL SPLIT SLEEVE CABLE SUPPORT ON EACH POWER AND CONTROL CABLE.
6. ALL PUMP POWER AND CONTROL CABLE LEADS MUST BE THE SAME LENGTH REGARDLESS OF PUMP LOCATION FROM TERMINAL/JUNCTION BOX.
7. FLOAT SWITCH SHOWN IN APPROXIMATE LOCATION. ACTUAL LOCATION SHALL BE ESTABLISHED DURING CONSTRUCTION.

ELEVATION SECTION
3 PUMP CONDUIT ROUTING
ALTERNATE LOW PROFILE CONFIGURATION

PROJECT NO.
R-000265-0XXX-X

TITLE
CITY OF HOUSTON
DESIGN GUIDELINE DRAWINGS
FOR SUBMERSIBLE LIFT STATIONS

CITY OF HOUSTON
DEPARTMENT OF PUBLIC WORKS AND ENGINEERING
ENGINEERING AND CONSTRUCTION

DESIGN ENGINEER TO INCLUDE COH STANDARD TITLE BLOCK ON ALL DRAWINGS, SEE STANDARD TITLE BLOCK DETAIL ON SHEET ZOCOX

REV. NO.	DESCRIPTION	APP'D	DATE

SCALE: XX" = 1'-0"
SUBMITTED:
DATE:
SURVEY BY:
FIELD BOOK NO.
DESIGNED BY:
DRAWN BY:
SHEET NO. OF SHEETS
DWG. NO.
H3E02-0516

CADD DWG. FILE NO. :
H3E02-3P.DWG

COHSTD.BDR

0 1 2 3 ORIGINAL SCALE IN INCHES FOR REDUCED PLANS

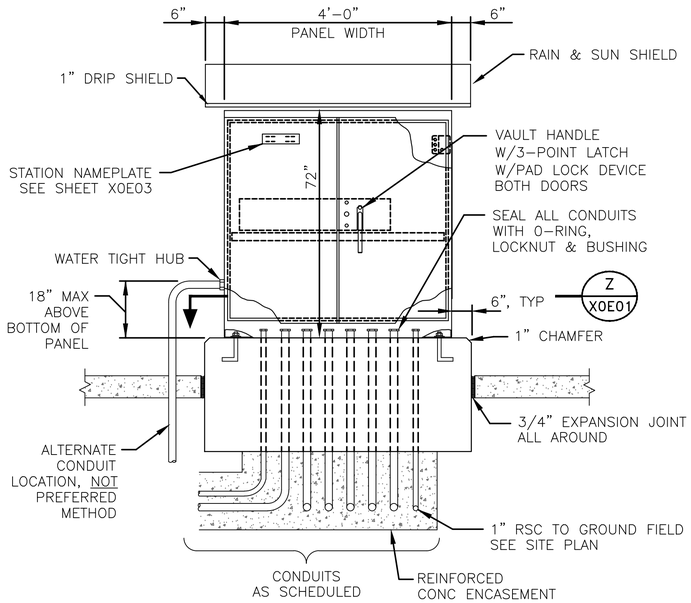

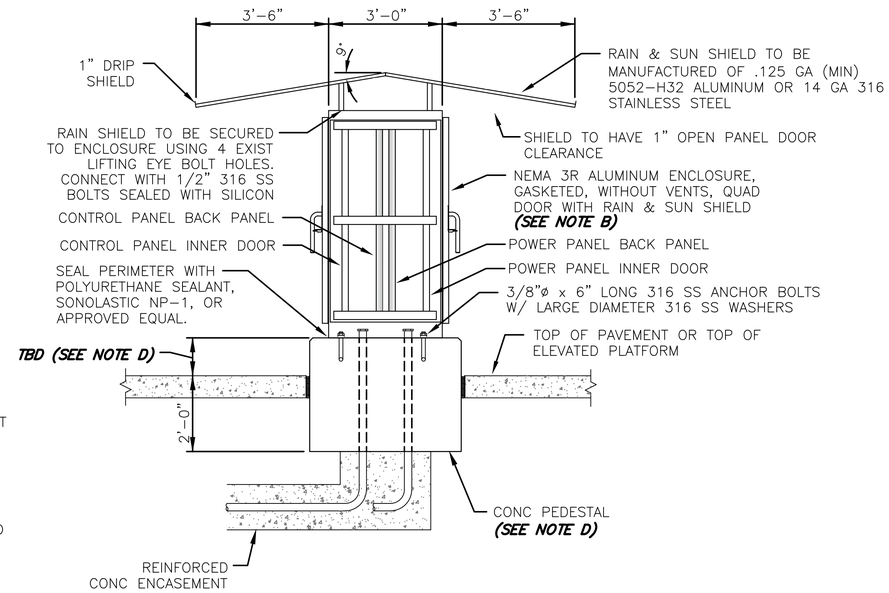

CONTROL CABINET ENCLOSURE WITH CONCRETE PEDESTAL FOUNDATION

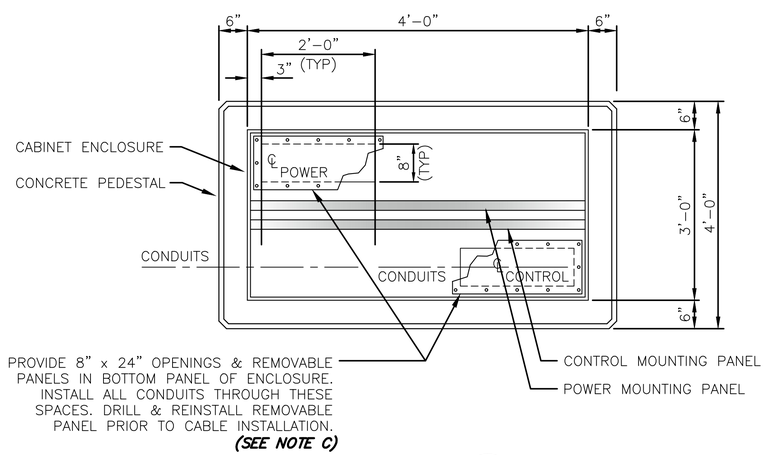

SECTION Z X0E01

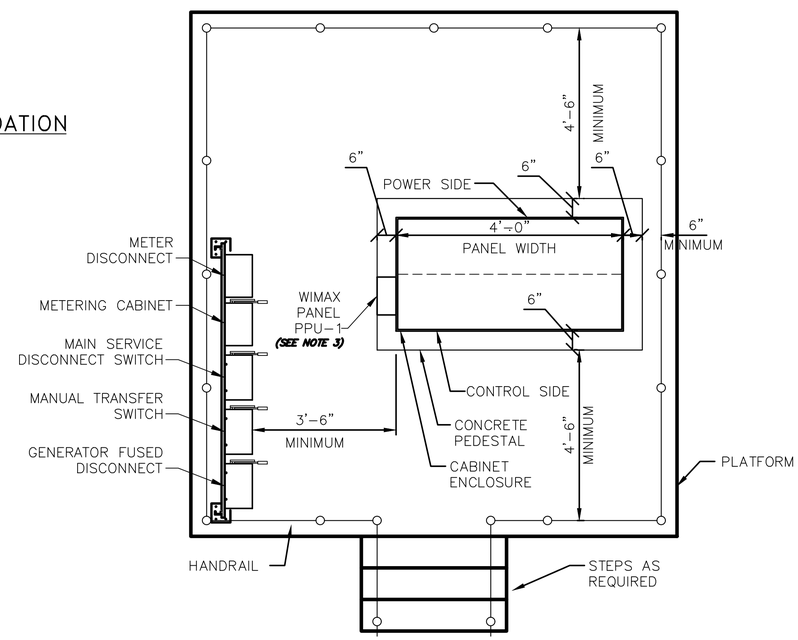

CONTROL CABINET ENCLOSURE ON ELEVATED PLATFORM DETAIL

(PLATFORM ELEVATION AS REQUIRED BY NOTE D)

NOTES TO DESIGN ENGINEER:

A. THESE LIFT STATION DRAWINGS ARE CONSIDERED TO BE DESIGN GUIDELINES FOR THE CONSTRUCTION OF CITY OF HOUSTON WASTEWATER SUBMERSIBLE LIFT STATIONS. THEIR INTENDED USE IS AS A FRAMEWORK FOR THE CONTRACTED DESIGN ENGINEER IN DEVELOPING SPECIFIC LIFT STATION DESIGNS.

IT IS THE RESPONSIBILITY OF THE CONTRACTED DESIGN ENGINEER TO VERIFY THE COMPLETENESS AND ACCURACY OF THE INFORMATION HEREIN CONTAINED AND TO ADJUST ACCORDING TO PROJECT SPECIFIC REQUIREMENTS.

B. DESIGN ENGINEER SHALL VERIFY AND ADJUST, AS REQUIRED, SIZE OF REMOVABLE PANEL IN CABINET. OPENING SHALL BE SUFFICIENT TO ACCOMMODATE ALL REQUIRED CONDUITS.

C. DESIGN ENGINEER SHALL SET/COORDINATE THE TOP OF THE CONCRETE PEDESTAL PER THE FOLLOWING CRITERIA. THE ELEVATION AT WHICH THE BOTTOM OF THE CONTROL PANEL IS MOUNTED HAS TO BE DETERMINED BY A COORDINATED REVIEW OF BOTH THE CITY OF HOUSTON CODE OF ORDINANCES, CHAPTER 19, ARTICLE III AND THE TROPICAL STORM ALLISON RECOVERY PROJECT (TSARP) MAPS. WHERE THE LIFT STATION IS LOCATED IN AN AREA DESIGNATED BY THE REFERENCED DOCUMENTS AS NOT BEING IN A FLOOD HAZARD ZONE THEN THE TOP OF CONCRETE OF THE CONCRETE PEDESTAL ON WHICH THE CONTROL PANEL IS MOUNTED HAS TO BE ONE (1) FOOT ABOVE THE TOP OF THE ADJACENT CONCRETE PAVEMENT. WHERE THE LIFT STATION IS LOCATED IN AN AREA THAT IS DESIGNATED BY THE CITY OF HOUSTON ORDINANCE AND THE RELATED TSARP MAPS AS BEING IN A FLOOD HAZARD ZONE THEN THE ELEVATION OF THE TOP OF THE CONCRETE PEDESTAL ON WHICH THE CONTROL PANEL IS MOUNTED HAS TO BE ONE (1) FOOT ABOVE THE TOP OF CONCRETE OF THE ELEVATED CONCRETE PLATFORM. MINIMUM CLEARANCE DISTANCES BETWEEN THE SIDE WALLS OF THE CONCRETE PEDESTAL AND THE HAND RAIL AROUND THE PERIMETER OF THE ELEVATED CONCRETE PLATFORM AND BETWEEN THE SIDE WALLS OF THE CONCRETE PEDESTAL AND THE MANUAL TRANSFER SWITCH ARE NOTED ON THE DETAIL.

D. DESIGN ENGINEER SHALL PROVIDE PROPER STRUCTURAL REINFORCING FOR CONCRETE PEDESTAL PER SPECIFIC SITE REQUIREMENTS.

E. DESIGN ENGINEER SHALL PROVIDE PROPER STRUCTURAL REINFORCING FOR CONCRETE PEDESTAL PER SPECIFIC SITE REQUIREMENTS.

F. THE DESIGN ENGINEER SHALL INCORPORATE ONLY THE NECESSARY STANDARD GUIDELINE DRAWINGS AND DETAILS INTO HIS PROJECT CONTRACT DOCUMENTATION PACKAGE, AND SHALL ADJUST PAGE NUMBERS AND CROSS REFERENCING ACCORDINGLY.

G. THE DESIGN ENGINEER SHALL CONSULT THE CITY OF HOUSTON DESIGN GUIDELINES MANUAL, THE ENGINEERING DESIGN MANUAL, AND THE MASTER SPECIFICATIONS FOR FURTHER INSTRUCTIONS AND INFORMATION PERTINENT TO THESE STANDARD DESIGN GUIDELINE DRAWINGS.

H. THE DESIGN ENGINEER SHALL REMOVE THESE NOTES, ALL REFERENCES TO THESE NOTES, AND ANY OTHER EXTRANEOUS INFORMATION FROM THE DESIGN GUIDELINE DRAWINGS. DESIGN ENGINEER SHALL PROVIDE ANY NOTES OR OTHER APPROPRIATE INFORMATION NECESSARY TO COMPLETE THE LIFT STATION DESIGN.

NOTES:

1. SEE SHEET X0E02 FOR EQUIPMENT SCHEDULE.
2. REFER TO SPEC 13471 FOR PANEL DIMENSIONS
3. WIMAX PANEL TO BE INSTALLED ABOVE SERVICE RACK ELEVATION.

3 PUMP OUTDOOR
CONTROL CABINET ENCLOSURE

PROJECT NO. R-000265-0XXX-X

TITLE CITY OF HOUSTON
DESIGN GUIDELINE DRAWINGS
FOR SUBMERSIBLE LIFT STATIONS

CITY OF HOUSTON
DEPARTMENT OF PUBLIC WORKS AND ENGINEERING
ENGINEERING AND CONSTRUCTION

DESIGN ENGINEER TO INCLUDE COH STANDARD TITLE BLOCK ON ALL DRAWINGS, SEE STANDARD TITLE BLOCK DETAIL ON SHEET Z0C0X

REV. NO.	DESCRIPTION	APP'D	DATE

SCALE: NONE
SUBMITTED:
DATE:
SURVEY BY:
FIELD BOOK NO.
DESIGNED BY:
DRAWN BY:
SHEET NO. OF SHEETS
DWG. NO. X0E01-0516

CADD DWG. FILE NO. : X0E01-OD3P.DWG

COHSTD.BDR

0 1 2 3 ORIGINAL SCALE IN INCHES FOR REDUCED PLANS

EQUIPMENT & DEVICE SCHEDULE

ITEM	QUANTITY	DESCRIPTION
A	1	PANEL BOARD, 120/240V, 1 PHASE, 3 WIRE, 100 A, 12 CKTS
B	3	FULL VOLTAGE, NON REVERSING, SINGLE SPEED, AUTOMATIC MOTOR STARTER W/120 VOLT CONTROL COIL, NEMA SIZE AS SCHEDULED.
C	1	WELL LEVEL CHART RECORDER – 4–20mA INPUT, DUAL CHANNEL
D	1	PUMP CONTROLLER – DIGITAL CONTROL CORP. MODEL 11436 OR EQUAL
E	1	PROGRAMMING SCREEN (HMI)
F	3	HAND–OFF–AUTO SWITCH, 3 POSITION, HEAVY DUTY, OILTIGHT WITH 2 SETS OF CONTACT BLOCKS (PUMP CONTROL)
G	3	INDICATING LIGHT, HEAVY DUTY, OILTIGHT, RED, 24 VDC, LED, WITH "RUN" LEGEND
H	3	REMOTE DISPLAY UNIT (SEE NOTE 2)
I	1	PUMP PROTECTION MODULE RESET PUSHBUTTON
J	2	SWITCH FOR CABINET LIGHT, 120V, 20A, SPST
K	4	DUPLEX RECEPTACLE, 120V, 20A, 2 WIRE, GROUNDED
L	2	24" LED STRIP LIGHT 120V SUITABLE FOR ZERO DEGREE OPERATION (SEE FIXTURE "B" ON Z0E01)
M	1	SURGE PROTECTOR – INCOMING POWER
N	3	TIME DELAY RELAY WITH THREE FORM C CONTACTS, 24 VDC COIL AND 11 PIN SOCKET BASE
P	9	CURRENT TRANSFORMER, RATIO AS SCHEDULED * EACH MOTOR AND INCOMING SERVICE
Q	9	TERMINAL BLOCKS, SIZED FOR MOTOR POWER REQUIREMENTS
R	*	CONTROL RELAY, 24 VDC RELAY WITH THREE FORM C CONTACTS AND 11 PIN SOCKET BASE
S	*	NOT USED.
T	*	NAMEPLATES, SEE SPECIFICATIONS (SEE NAMEPLATE SCHEDULE) (SEE NOTE 1)
U	3	MOTOR PROTECTION RELAY
V	6	FUSE HOLDER & FUSES – PHASE FAILURE
W	1	NEMA 3R GASKETED ALUMINUM ENCLOSURE WITHOUT VENTS
X	1	DOOR MOUNTED ROTARY HANDLE DISCONNECT SWITCH (SUITABLE FOR ENVIRONMENT)
Y	1	THERMAL–MAGNETIC MOLDED CASE MAIN CIRCUIT BREAKER, SIZE AS SCHEDULED
Z	3	ADJUSTABLE INSTANTANEOUS TRIP MOTOR CIRCUIT PROTECTOR, SIZE AS SCHEDULED
AA	*	TERMINAL BLOCK
BB	3	EXTERNAL RESET PUSH BUTTON MECHANISM
CC	1	ANALOG I/O SURGE SUPPRESSOR
DD	1	WIRE DUCT 2" WIDE X 2" DEEP MINIMUM
EE	1	THERMAL–MAGNETIC MOLDED CASE CIRCUIT BREAKER FOR LIGHTING TRANSFORMER, SIZE AS SCHEDULED
FF	1	GROUND BUS
GG	1	10KVA, 480 – 120/240V, 1ø, 3W DRY TYPE TRANSFORMER
HH	*	NOT USED.
II	1	120VAC – 24VAC POWER SUPPLY (AS REQUIRED)
JJ	11	CARTRIDGE FUSES & FUSE HOLDER
KK	8	QUARTER TURN CAPTIVE DOOR CLOSURE
LL	1	120VAC – 24VDC PLC POWER SUPPLY, 5A
MM	2	MOTION SWITCH
NN	1	INDICATING LED LIGHT, HEAVY DUTY, OILTIGHT, RED, 24 VDC, LED WITH "BACKUP" LEGEND
PP	1	INDICATING LED LIGHT, HEAVY DUTY, OILTIGHT, GREEN, 24 VDC, LED WITH "PLC" LEGEND
QQ	1	PRIMARY – BACKUP PLC MODE SELECTOR SWITCH
RR	1	NOT USED.
SS	1	WIMAX ETHERNET SWITCH
TT	1	POWER SURGE PROTECTOR – CONTROL POWER
UU	1	PROGRAMMABLE LOGIC CONTROLLER WITH EXPANSION UNIT
VV	1	PHASE AND UNDER VOLTAGE MONITOR
WW	*	FUSED TERMINAL BLOCKS
XX	3	PUMP PROTECTION MODULE RATED FOR CLASS I, DIVISION 1
YY	*	NOT USED.
ZZ	*	POWER FACTOR CORRECTION CAPACITORS ***(SEE NOTE B)***
AB	–	FLASHER MODULE
AC	1	POWER DISTRIBUTION BLOCK
AD	1	NEUTRAL LUG

* – AS SCHEDULED

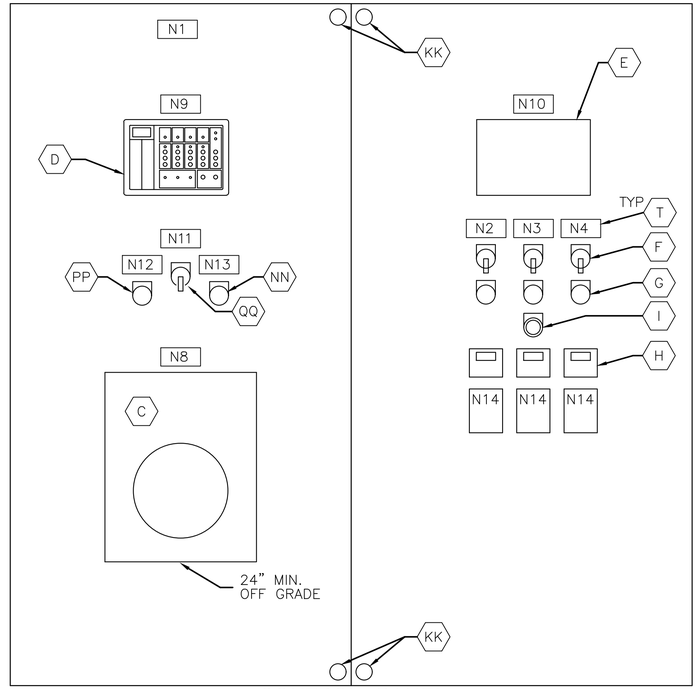

LEFT DOOR — RIGHT DOOR

CONTROL PANEL FRONT INNER DOOR ELEVATION

SCALE: NTS

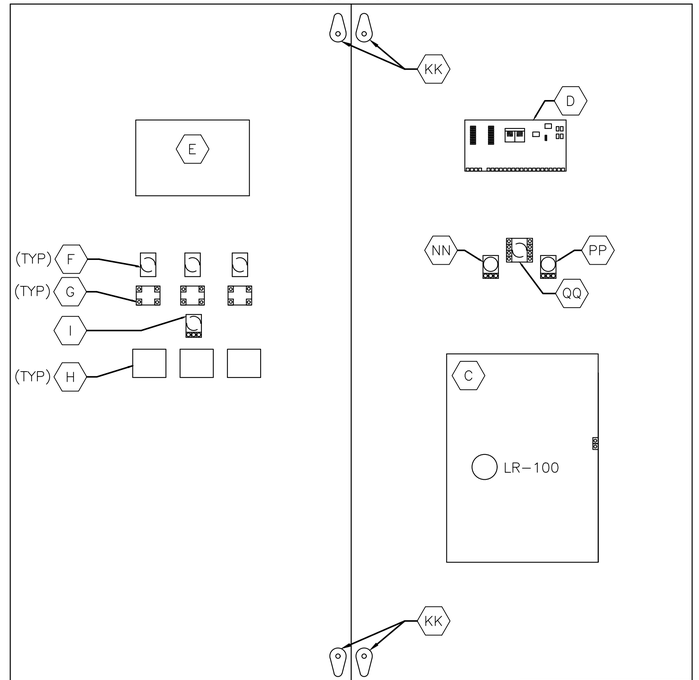

BACK INNER DOOR ELEVATION

SCALE: NTS

NOTES TO DESIGN ENGINEER:

A. THESE LIFT STATION DRAWINGS ARE CONSIDERED TO BE DESIGN GUIDELINES FOR THE CONSTRUCTION OF CITY OF HOUSTON WASTEWATER SUBMERSIBLE LIFT STATIONS. THEIR INTENDED USE IS AS A FRAMEWORK FOR THE CONTRACTED DESIGN ENGINEER IN DEVELOPING SPECIFIC LIFT STATION DESIGNS.

IT IS THE RESPONSIBILITY OF THE CONTRACTED DESIGN ENGINEER TO VERIFY THE COMPLETENESS AND ACCURACY OF THE INFORMATION HEREIN CONTAINED AND TO ADJUST ACCORDING TO PROJECT SPECIFIC REQUIREMENTS.

B. POWER FACTOR CORRECTION CAPACITOR IS REQUIRED FOR EACH PUMP RATED AT 20 HP AND GREATER.

C. THE DESIGN ENGINEER SHALL INCORPORATE ONLY THE NECESSARY STANDARD GUIDELINE DRAWINGS AND DETAILS INTO HIS PROJECT CONTRACT DOCUMENTATION PACKAGE, AND SHALL ADJUST PAGE NUMBERS AND CROSS REFERENCING ACCORDINGLY.

D. THE DESIGN ENGINEER SHALL CONSULT THE CITY OF HOUSTON DESIGN GUIDELINES MANUAL, THE ENGINEERING DESIGN MANUAL, AND THE MASTER SPECIFICATIONS FOR FURTHER INSTRUCTIONS AND INFORMATION PERTINENT TO THESE STANDARD DESIGN GUIDELINE DRAWINGS.

E. THE DESIGN ENGINEER SHALL REMOVE THESE NOTES, ALL REFERENCES TO THESE NOTES, AND ANY OTHER EXTRANEOUS INFORMATION FROM THE DESIGN GUIDELINE DRAWINGS. DESIGN ENGINEER SHALL PROVIDE ANY NOTES OR OTHER APPROPRIATE INFORMATION NECESSARY TO COMPLETE THE LIFT STATION DESIGN.

NOTES:

1. NAMEPLATES SHALL BE MOUNTED TO PANELS USING STAINLESS STEEL HARDWARE.
2. SET TO DISPLAY CURRENT READING.

3 PUMP OUTDOOR
CONTROL CABINET
EQUIPMENT LAYOUT & SCHEDULE

PROJECT NO. R–000265–0XXX–X

TITLE CITY OF HOUSTON
DESIGN GUIDELINE DRAWINGS
FOR SUBMERSIBLE LIFT STATIONS

CITY OF HOUSTON
DEPARTMENT OF PUBLIC WORKS AND ENGINEERING
ENGINEERING AND CONSTRUCTION

DESIGN ENGINEER TO INCLUDE COH STANDARD TITLE BLOCK ON ALL DRAWINGS, SEE STANDARD TITLE BLOCK DETAIL ON SHEET Z0C0X

REV. NO.	DESCRIPTION	APP'D	DATE

SCALE: NONE
SUBMITTED:
DATE:
SURVEY BY:
FIELD BOOK NO.
DESIGNED BY:
DRAWN BY:
SHEET NO. OF SHEETS
DWG. NO. X0E02–0516

CADD DWG. FILE NO. : X0E02–0D3P.DWG

COHSTD.BDR

0 1 2 3 ORIGINAL SCALE IN INCHES FOR REDUCED PLANS

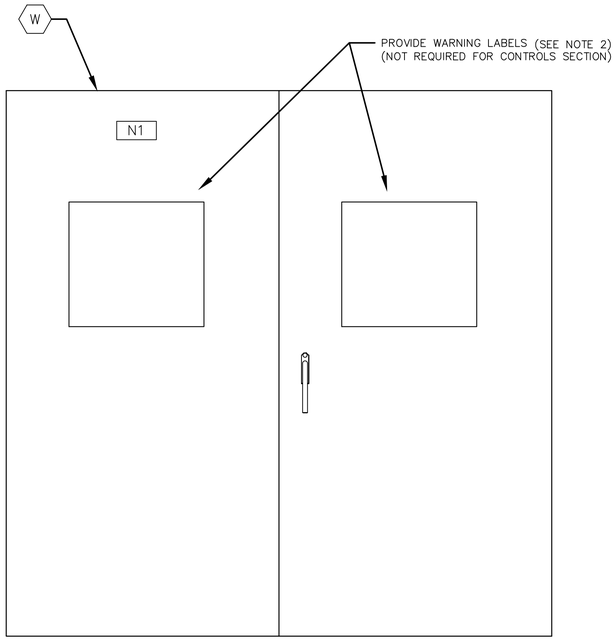

CONTROL CABINET

OUTER DOOR ELEVATION

SCALE: NTS

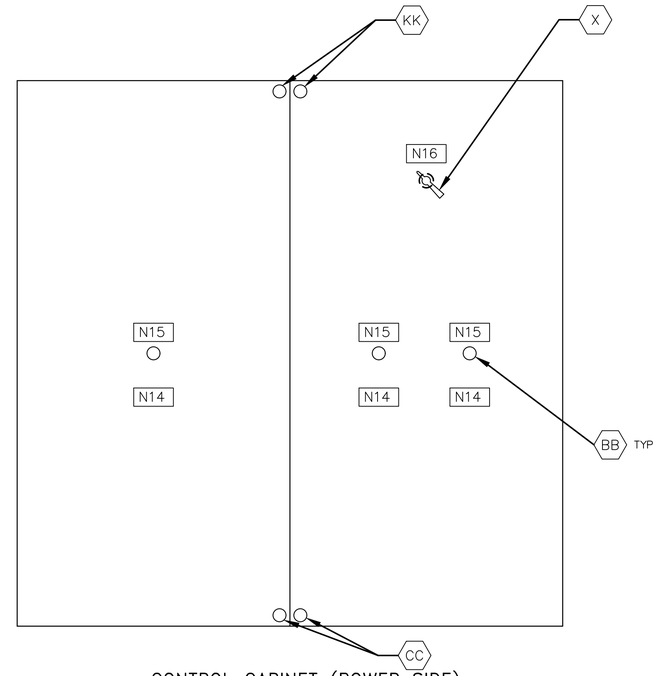

CONTROL CABINET (POWER SIDE)

INNER DOOR ELEVATION

SCALE: NTS

(SEE NOTE 1)

NAMEPLATE SCHEDULE

DESIGNATION	ENGRAVED
N1	PUMP STATION DESIGNATION
N2	PUMP NO. 101
N3	PUMP NO. 102
N4	PUMP NO. 103

DESIGNATION	ENGRAVED
N8	LEVEL RECORDER
N9	PUMP CONTROLLER
N10	PROGRAMMING SCREEN
N11	CONTROL MODE
N12	PRIMARY
N13	BACKUP
N14	MOTOR DATA
	HORSEPOWER (OUTPUT) _____
	RPM AT FULL LOAD _____
	TIME RATING _____
	FREQUENCY _____
	NUMBER OF PHASES _____
	MODEL NUMBER _____
	RATED VOLTAGE _____
	SERVICE FACTOR _____
	FULL LOAD AMPS _____
	INSULATION CLASS _____
	NEMA DESIGN LETTER _____
	TEMPERATURE RISE _____
	NEMA FRAME SIZE _____
	DATE OF MANUFACTURE _____
	THERMO PROTECTION (IF REQUIRED) _____
	MOISTURE DETECTION (IF REQUIRED) _____
N15	EXTERNAL OVERLOAD RESET PUSH BUTTON MECHANISM
N16	MAIN BREAKER

NOTES TO DESIGN ENGINEER:

A. THESE LIFT STATION DRAWINGS ARE CONSIDERED TO BE DESIGN GUIDELINES FOR THE CONSTRUCTION OF CITY OF HOUSTON WASTEWATER SUBMERSIBLE LIFT STATIONS. THEIR INTENDED USE IS AS A FRAMEWORK FOR THE CONTRACTED DESIGN ENGINEER IN DEVELOPING SPECIFIC LIFT STATION DESIGNS.

IT IS THE RESPONSIBILITY OF THE CONTRACTED DESIGN ENGINEER TO VERIFY THE COMPLETENESS AND ACCURACY OF THE INFORMATION HEREIN CONTAINED AND TO ADJUST ACCORDING TO PROJECT SPECIFIC REQUIREMENTS.

B. THE DESIGN ENGINEER SHALL INCORPORATE ONLY THE NECESSARY STANDARD GUIDELINE DRAWINGS AND DETAILS INTO HIS PROJECT CONTRACT DOCUMENTATION PACKAGE, AND SHALL ADJUST PAGE NUMBERS AND CROSS REFERENCING ACCORDINGLY.

C. THE DESIGN ENGINEER SHALL CONSULT THE CITY OF HOUSTON DESIGN GUIDELINES MANUAL, THE ENGINEERING DESIGN MANUAL, AND THE MASTER SPECIFICATIONS FOR FURTHER INSTRUCTIONS AND INFORMATION PERTINENT TO THESE STANDARD DESIGN GUIDELINE DRAWINGS.

D. THE DESIGN ENGINEER SHALL REMOVE THESE NOTES, ALL REFERENCES TO THESE NOTES, AND ANY OTHER EXTRANEOUS INFORMATION FROM THE DESIGN GUIDELINE DRAWINGS. DESIGN ENGINEER SHALL PROVIDE ANY NOTES OR OTHER APPROPRIATE INFORMATION NECESSARY TO COMPLETE THE LIFT STATION DESIGN.

NOTES:

1. SEE SHEET X0E02 FOR EQUIPMENT SCHEDULE.
2. REFER TO NEC SECTIONS 110.16 & 110.21

3 PUMP OUTDOOR
CONTROL CABINET
EQUIPMENT LAYOUT

PROJECT NO. R-000265-0XXX-X

TITLE CITY OF HOUSTON
DESIGN GUIDELINE DRAWINGS
FOR SUBMERSIBLE LIFT STATIONS

CITY OF HOUSTON
DEPARTMENT OF PUBLIC WORKS AND ENGINEERING
ENGINEERING AND CONSTRUCTION

DESIGN ENGINEER TO INCLUDE COH STANDARD TITLE BLOCK ON ALL DRAWINGS, SEE STANDARD TITLE BLOCK DETAIL ON SHEET Z0C0X

REV. NO.	DESCRIPTION	APP'D	DATE

SCALE: NONE
SUBMITTED:
DATE:
SURVEY BY:
FIELD BOOK NO.
DESIGNED BY:
DRAWN BY:
SHEET NO. OF SHEETS
DWG. NO. X0E03-0516

CADD DWG. FILE NO. : X0E03-0D3P.DWG

COHSTD.BDR

0 1 2 3 ORIGINAL SCALE IN INCHES FOR REDUCED PLANS

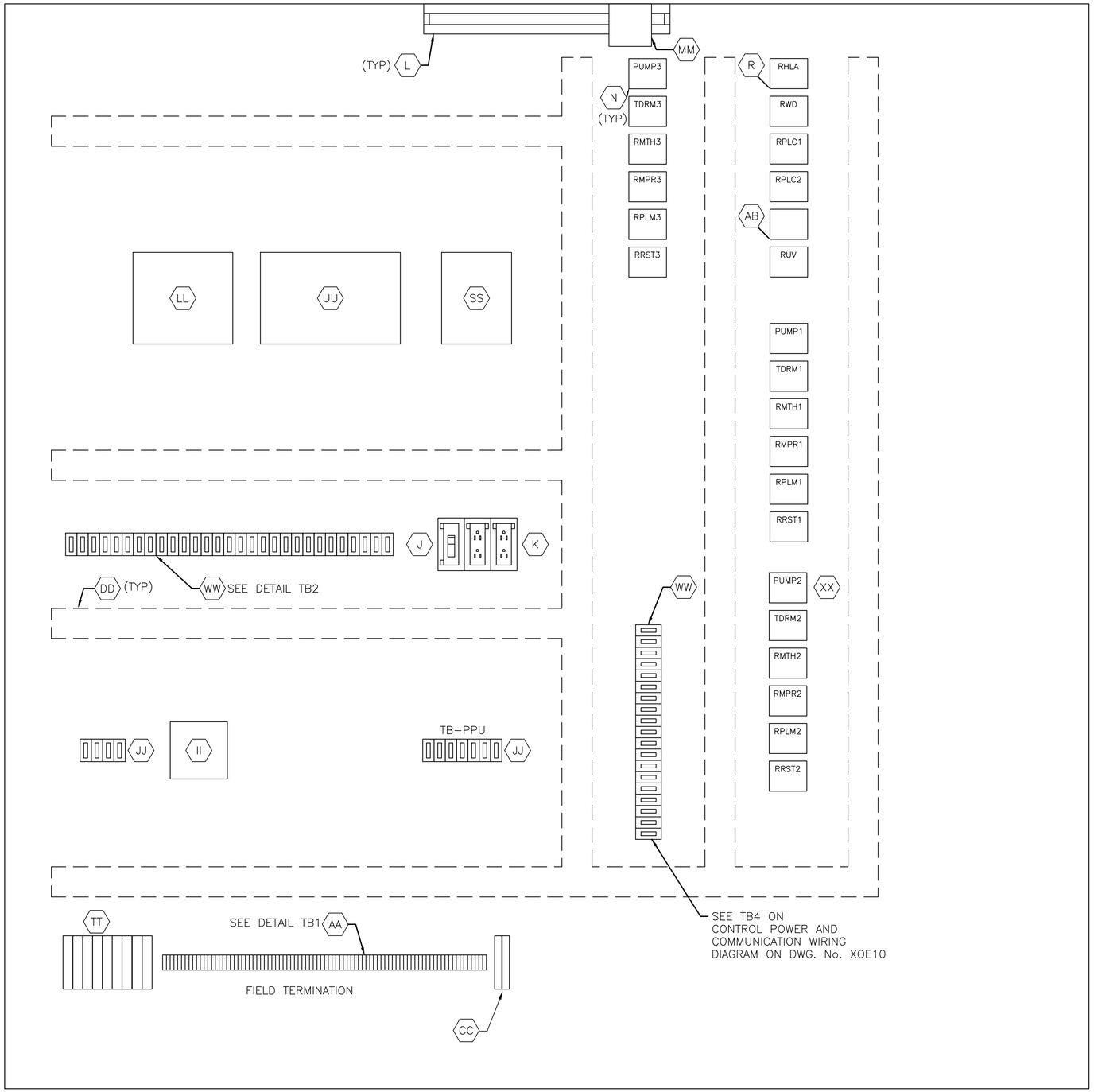

CONTROL PANEL ELEVATION

C1-N
C1-1
C2-N
C2-1
C3-N
C3-1
C4-N
C4-1
C5-N
C5-1
C6-N
C6-1
SPARE
L1A
L1N
SPARE
11
1001
1001A
12
1003
1003A
15
15N
SPARE
18
19
36
36N
37
38
39
40
41
42
43
44
45
46
49
50
51
52
103
104
105
106
107
108
110
113
119
SPARE
203
204
205
206
207
208
210
213
219
SPARE
303
304
305
306
307
308
310
313
319
SPARE
1
24V-
24V-
2

DETAIL TB1

ALL L AND N FOR EACH PUMP CONTROL TO BE FUSED

13
13A
13G
14
14A
14G
17
19
20
21
22
23
24
SPARE
SPARE
27
28
29
32
33
34
38
40
42
44
45
46
103
104
109
117
118
120
203
204
209
217
218
220
303
304
309
317
318
320
SPARE
SPARE
SPARE
SPARE
SPARE
SPARE
SPARE
SPARE

DETAIL TB2

LEGEND	
TAG	DESCRIPTION
RMTH	PUMP PROTECTION ALARM RELAY
RHLA	HIGH LEVEL RELAY ALARM
RPLMP	BACKUP SYSTEM RUN RELAY
RRST	PUMP RESET AUX RELAY
RPLC	PLC MODE AUX RELAY
RMPR	MOTOR PROTECTION ALARM RELAY
RWD	WATCHDOG RELAY
RUV	UNDER VOLTAGE RELAY

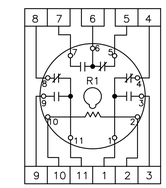

RELAY DETAIL
ITEM N & R

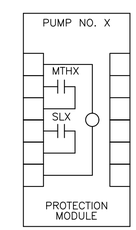

NOTE: REPLACE "X" WITH APPROPRIATE PUMP NO.

PUMP PROTECTION MODULE
DETAIL, ITEM XX

NOTES TO DESIGN ENGINEER:

A. THESE LIFT STATION DRAWINGS ARE CONSIDERED TO BE DESIGN GUIDELINES FOR THE CONSTRUCTION OF CITY OF HOUSTON WASTEWATER SUBMERSIBLE LIFT STATIONS. THEIR INTENDED USE IS AS A FRAMEWORK FOR THE CONTRACTED DESIGN ENGINEER IN DEVELOPING SPECIFIC LIFT STATION DESIGNS.

IT IS THE RESPONSIBILITY OF THE CONTRACTED DESIGN ENGINEER TO VERIFY THE COMPLETENESS AND ACCURACY OF THE INFORMATION HEREIN CONTAINED AND TO ADJUST ACCORDING TO PROJECT SPECIFIC REQUIREMENTS.

B. THE DESIGN ENGINEER SHALL INCORPORATE ONLY THE NECESSARY STANDARD GUIDELINE DRAWINGS AND DETAILS INTO HIS PROJECT CONTRACT DOCUMENTATION PACKAGE, AND SHALL ADJUST PAGE NUMBERS AND CROSS REFERENCING ACCORDINGLY.

C. THE DESIGN ENGINEER SHALL CONSULT THE CITY OF HOUSTON DESIGN GUIDELINES MANUAL, THE ENGINEERING DESIGN MANUAL, AND THE MASTER SPECIFICATIONS FOR FURTHER INSTRUCTIONS AND INFORMATION PERTINENT TO THESE STANDARD DESIGN GUIDELINE DRAWINGS.

D. THE DESIGN ENGINEER SHALL REMOVE THESE NOTES, ALL REFERENCES TO THESE NOTES, AND ANY OTHER EXTRANEOUS INFORMATION FROM THE DESIGN GUIDELINE DRAWINGS. DESIGN ENGINEER SHALL PROVIDE ANY NOTES OR OTHER APPROPRIATE INFORMATION NECESSARY TO COMPLETE THE LIFT STATION DESIGN.

NOTES:
1. SEE SHEET X0E02 FOR EQUIPMENT SCHEDULE.

3 PUMP OUTDOOR
CONTROL CABINET
EQUIPMENT LAYOUT

PROJECT NO. R-000265-0XXX-X

TITLE CITY OF HOUSTON
DESIGN GUIDELINE DRAWINGS
FOR SUBMERSIBLE LIFT STATIONS

CITY OF HOUSTON
DEPARTMENT OF PUBLIC WORKS AND ENGINEERING
ENGINEERING AND CONSTRUCTION

DESIGN ENGINEER TO INCLUDE COH STANDARD TITLE BLOCK ON ALL DRAWINGS, SEE STANDARD TITLE BLOCK DETAIL ON SHEET Z0C0X

REV. NO.	DESCRIPTION	APP'D	DATE

SCALE: 3" = 1'-0"
SUBMITTED:
DATE:
SURVEY BY:
FIELD BOOK NO.
DESIGNED BY:
DRAWN BY:
SHEET NO. OF SHEETS
DWG. NO. X0E04-0516

CADD DWG. FILE NO. : X0E04-0D3PDWG

COHSTD.BDR

0 1 2 3 ORIGINAL SCALE IN INCHES FOR REDUCED PLANS

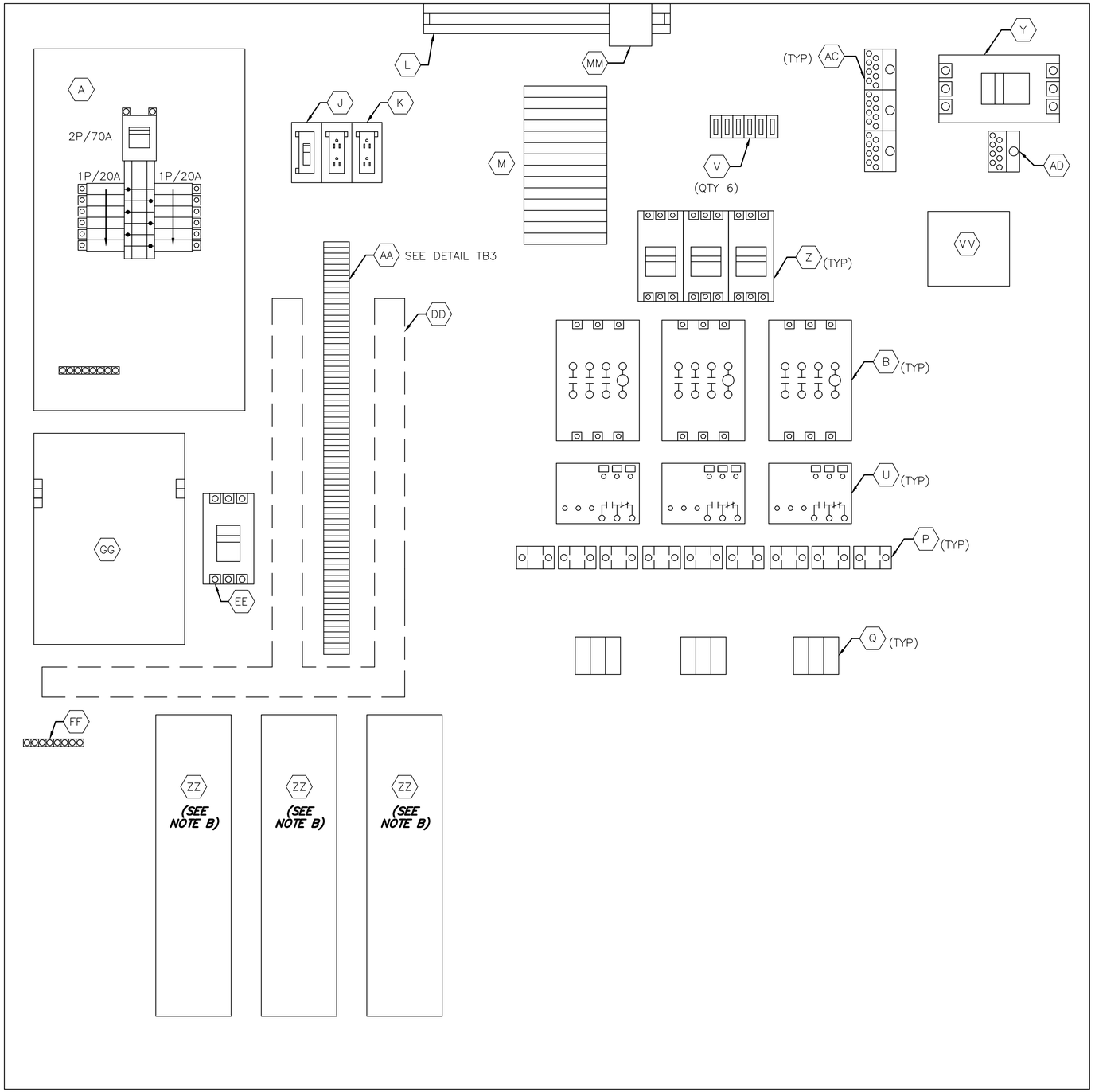

POWER PANEL ELEVATION

C1–N
C1–1
C2–N
C2–1
C3–N
C3–1
C4–N
C4–1
C5–N
C5–1
C6–N
C6–1
SPARE
L1A
L1N
SPARE
18
SPARE
105
106
107
108
110
113
119
SPARE
205
206
207
208
210
213
219
SPARE
305
306
307
308
310
313
319
SPARE
SPARE
SPARE
SPARE
SPARE
SPARE
SPARE
SPARE
SPARE
SPARE
SPARE
SPARE
SPARE
SPARE
SPARE
SPARE
SPARE
SPARE

DETAIL TB3

NOTES TO DESIGN ENGINEER:

A. THESE LIFT STATION DRAWINGS ARE CONSIDERED TO BE DESIGN GUIDELINES FOR THE CONSTRUCTION OF CITY OF HOUSTON WASTEWATER SUBMERSIBLE LIFT STATIONS. THEIR INTENDED USE IS AS A FRAMEWORK FOR THE CONTRACTED DESIGN ENGINEER IN DEVELOPING SPECIFIC LIFT STATION DESIGNS.

IT IS THE RESPONSIBILITY OF THE CONTRACTED DESIGN ENGINEER TO VERIFY THE COMPLETENESS AND ACCURACY OF THE INFORMATION HEREIN CONTAINED AND TO ADJUST ACCORDING TO PROJECT SPECIFIC REQUIREMENTS.

B. A POWER FACTOR CORRECTION CAPACITOR IS REQUIRED FOR EACH PUMP RATED AT 20 HP AND GREATER. FOR 5 OR 6 PUMP STATIONS REQUIRING MORE THAN 4 POWER FACTOR CORRECTION CAPACITORS, DESIGN ENGINEER SHALL VERIFY EQUIPMENT SPACING REQUIREMENTS FOR PANEL LAYOUT AND REDESIGN EQUIPMENT CABINET AND PANEL LAYOUT AS REQUIRED.

C. THE DESIGN ENGINEER SHALL INCORPORATE ONLY THE NECESSARY STANDARD GUIDELINE DRAWINGS AND DETAILS INTO HIS PROJECT CONTRACT DOCUMENTATION PACKAGE, AND SHALL ADJUST PAGE NUMBERS AND CROSS REFERENCING ACCORDINGLY.

D. THE DESIGN ENGINEER SHALL CONSULT THE CITY OF HOUSTON DESIGN GUIDELINES MANUAL, THE ENGINEERING DESIGN MANUAL, AND THE MASTER SPECIFICATIONS FOR FURTHER INSTRUCTIONS AND INFORMATION PERTINENT TO THESE STANDARD DESIGN GUIDELINE DRAWINGS.

E. THE DESIGN ENGINEER SHALL REMOVE THESE NOTES, ALL REFERENCES TO THESE NOTES, AND ANY OTHER EXTRANEOUS INFORMATION FROM THE DESIGN GUIDELINE DRAWINGS. DESIGN ENGINEER SHALL PROVIDE ANY NOTES OR OTHER APPROPRIATE INFORMATION NECESSARY TO COMPLETE THE LIFT STATION DESIGN.

NOTES:
1. SEE SHEET X0E02 FOR EQUIPMENT SCHEDULE.

3 PUMP OUTDOOR
CONTROL CABINET
EQUIPMENT LAYOUT

PROJECT NO. R-000265-0XXX-X

TITLE CITY OF HOUSTON
DESIGN GUIDELINE DRAWINGS
FOR SUBMERSIBLE LIFT STATIONS

CITY OF HOUSTON
DEPARTMENT OF PUBLIC WORKS AND ENGINEERING
ENGINEERING AND CONSTRUCTION

DESIGN ENGINEER TO INCLUDE COH STANDARD TITLE BLOCK ON ALL DRAWINGS, SEE STANDARD TITLE BLOCK DETAIL ON SHEET Z0C0X

REV. NO.	DESCRIPTION	APP'D	DATE

SCALE: 3" = 1'-0"
SUBMITTED:
DATE:
SURVEY BY:
FIELD BOOK NO.
DESIGNED BY:
DRAWN BY:
SHEET NO. OF SHEETS
DWG. NO. X0E05-0516

CADD DWG. FILE NO. : X0E05-OD3P.DWG

COHSTD.BDR

0 1 2 3 ORIGINAL SCALE IN INCHES FOR REDUCED PLANS

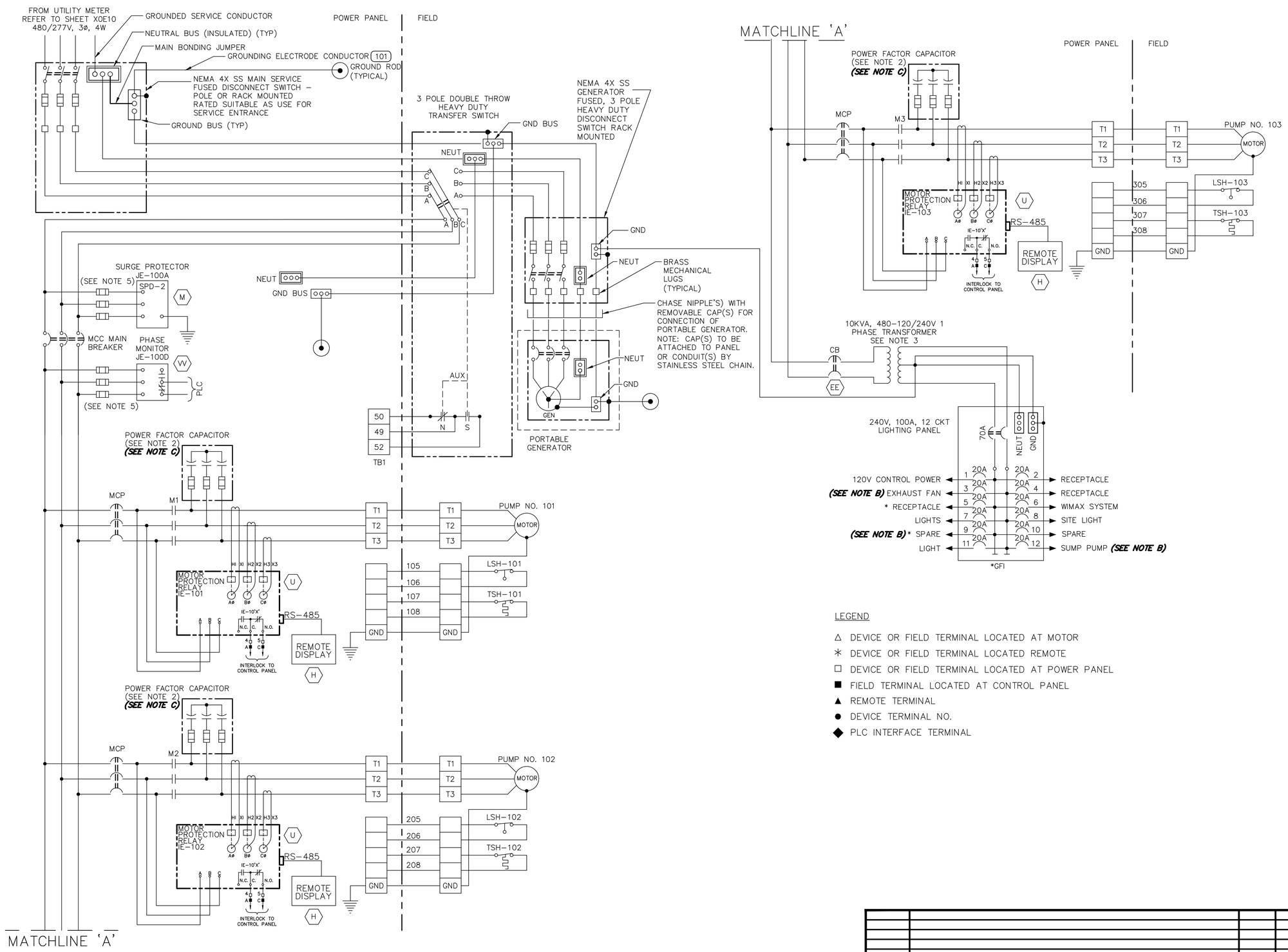

LEGEND

- △ DEVICE OR FIELD TERMINAL LOCATED AT MOTOR
- ✳ DEVICE OR FIELD TERMINAL LOCATED REMOTE
- □ DEVICE OR FIELD TERMINAL LOCATED AT POWER PANEL
- ■ FIELD TERMINAL LOCATED AT CONTROL PANEL
- ▲ REMOTE TERMINAL
- ● DEVICE TERMINAL NO.
- ◆ PLC INTERFACE TERMINAL

NOTES TO DESIGN ENGINEER:

A. THESE LIFT STATION DRAWINGS ARE CONSIDERED TO BE DESIGN GUIDELINES FOR THE CONSTRUCTION OF CITY OF HOUSTON WASTEWATER SUBMERSIBLE LIFT STATIONS. THEIR INTENDED USE IS AS A FRAMEWORK FOR THE CONTRACTED DESIGN ENGINEER IN DEVELOPING SPECIFIC LIFT STATION DESIGNS.

IT IS THE RESPONSIBILITY OF THE CONTRACTED DESIGN ENGINEER TO VERIFY THE COMPLETENESS AND ACCURACY OF THE INFORMATION HEREIN CONTAINED AND TO ADJUST ACCORDING TO PROJECT SPECIFIC REQUIREMENTS.

B. PROVIDE NOTED ITEMS FOR STATIONS WITH VALVE VAULT DESIGNATED AS LOW PROFILE, EXPOSED SITE CONFIGURATION, ONLY. PROVIDE VALVE VAULT LIGHTING, RECEPTACLES, SUMP PUMP AND EXHAUST FAN FOR CLOSED TOP VALVE VAULTS ONLY (CONCRETE SLAB WITH HATCHES). DELETE THESE ITEMS FOR VALVE VAULTS WITH OPEN GRATING TOPS.

C. POWER FACTOR CORRECTION CAPACITOR IS REQUIRED FOR EACH PUMP RATED AT 20 HP OR GREATER. MOUNT CAPACITORS EXTERNAL TO MCC WITHIN THE CONTROL BUILDING.

D. THE DESIGN ENGINEER SHALL INCORPORATE ONLY THE NECESSARY STANDARD GUIDELINE DRAWINGS AND DETAILS INTO HIS PROJECT CONTRACT DOCUMENTATION PACKAGE, AND SHALL ADJUST PAGE NUMBERS AND CROSS REFERENCING ACCORDINGLY.

E. THE DESIGN ENGINEER SHALL CONSULT THE CITY OF HOUSTON DESIGN GUIDELINES MANUAL, THE ENGINEERING DESIGN MANUAL, AND THE MASTER SPECIFICATIONS FOR FURTHER INSTRUCTIONS AND INFORMATION PERTINENT TO THESE STANDARD DESIGN GUIDELINE DRAWINGS.

F. THE DESIGN ENGINEER SHALL REMOVE THESE NOTES, ALL REFERENCES TO THESE NOTES, AND ANY OTHER EXTRANEOUS INFORMATION FROM THE DESIGN GUIDELINE DRAWINGS. DESIGN ENGINEER SHALL PROVIDE ANY NOTES OR OTHER APPROPRIATE INFORMATION NECESSARY TO COMPLETE THE LIFT STATION DESIGN.

NOTES:

1. UNLESS OTHERWISE INDICATED, ALL DEVICES WITHOUT FURTHER DESIGNATION ARE LOCATED AT THE CONTROL PANEL.
2. CONTRACTOR TO COORDINATE POWER FACTOR CORRECTION CAPACITOR SIZE WITH PUMP MANUFACTURER.
3. CONTRACTOR TO REVISE DWG. BASED ON MANUFACTURE AND SIZE.
4. CONTRACTOR SHALL TERMINATE POWER & CONTROL WIRES PER MANUFACTURER'S REQUIREMENTS.
5. PROVIDE FUSE SIZE ACCORDING TO MANUFACTURER'S REQUIREMENTS.

3 PUMP OUTDOOR
CONTROL PANEL
POWER WIRING DIAGRAM

PROJECT NO. R-000265-0XXX-X

TITLE CITY OF HOUSTON
DESIGN GUIDELINE DRAWINGS
FOR SUBMERSIBLE LIFT STATIONS

CITY OF HOUSTON
DEPARTMENT OF PUBLIC WORKS AND ENGINEERING
ENGINEERING AND CONSTRUCTION

DESIGN ENGINEER TO INCLUDE COH STANDARD TITLE BLOCK ON ALL DRAWINGS, SEE STANDARD TITLE BLOCK DETAIL ON SHEET Z0C0X

REV. NO.	DESCRIPTION	APP'D	DATE

SCALE: NONE
DESIGNED BY:
DRAWN BY:
SUBMITTED:
DATE:
SURVEY BY:
FIELD BOOK NO.
SHEET NO. OF SHEETS
DWG. NO. X0E06-0516

CADD DWG. FILE NO. : X0E06-OD3P.DWG

COHSTD.BDR

0 1 2 3 ORIGINAL SCALE IN INCHES FOR REDUCED PLANS

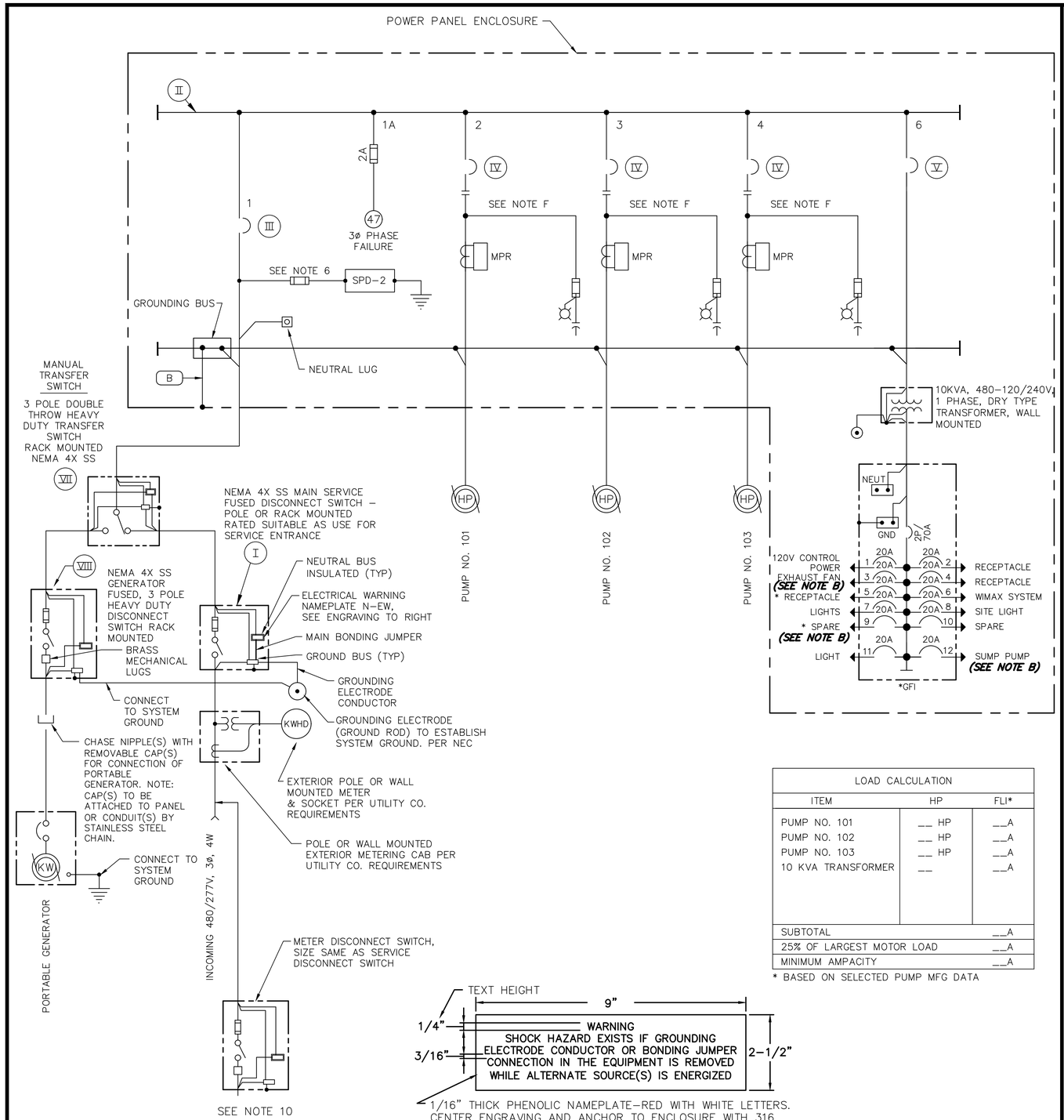

LOAD CALCULATION		
ITEM	HP	FLI*
PUMP NO. 101	__ HP	__A
PUMP NO. 102	__ HP	__A
PUMP NO. 103	__ HP	__A
10 KVA TRANSFORMER	__	__A
SUBTOTAL		__A
25% OF LARGEST MOTOR LOAD		__A
MINIMUM AMPACITY		__A

* BASED ON SELECTED PUMP MFG DATA

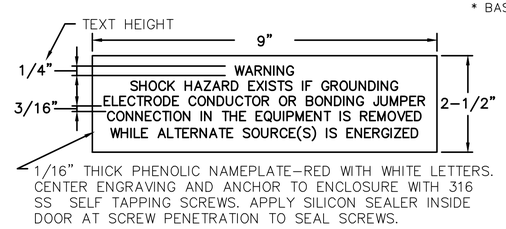

1/16" THICK PHENOLIC NAMEPLATE-RED WITH WHITE LETTERS. CENTER ENGRAVING AND ANCHOR TO ENCLOSURE WITH 316 SS SELF TAPPING SCREWS. APPLY SILICON SEALER INSIDE DOOR AT SCREW PENETRATION TO SEAL SCREWS.

ELECTRICAL WARNING NAMEPLATE N-EW ENGRAVING

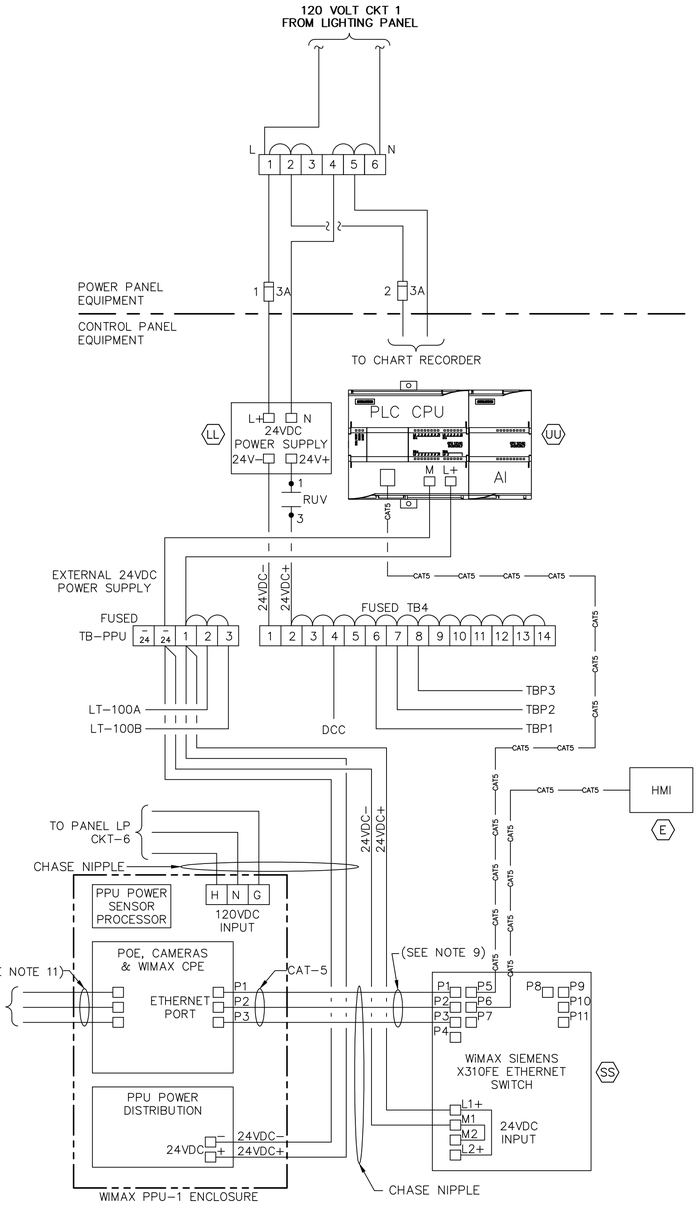

CONTROL POWER & COMMUNICATIONS WIRING DIAGRAM

(SEE NOTE B)

NOTES TO DESIGN ENGINEER:

A. THESE LIFT STATION DRAWINGS ARE CONSIDERED TO BE DESIGN GUIDELINES FOR THE CONSTRUCTION OF CITY OF HOUSTON WASTEWATER SUBMERSIBLE LIFT STATIONS. THEIR INTENDED USE IS AS A FRAMEWORK FOR THE CONTRACTED DESIGN ENGINEER IN DEVELOPING SPECIFIC LIFT STATION DESIGNS.

IT IS THE RESPONSIBILITY OF THE CONTRACTED DESIGN ENGINEER TO VERIFY THE COMPLETENESS AND ACCURACY OF THE INFORMATION HEREIN CONTAINED AND TO ADJUST ACCORDING TO PROJECT SPECIFIC REQUIREMENTS.

B. PROVIDE NOTED ITEMS FOR STATIONS WITH VALVE VAULT DESIGNATED AS ALTERNATE LOW PROFILE CONFIGURATION ONLY. PROVIDE VALVE VAULT SUMP PUMP AND EXHAUST FAN FOR CLOSED TOP VALVE VAULTS ONLY (CONCRETE TOP SLAB WITH HATCHES). DELETE THESE ITEMS FOR VALVE VAULTS WITH OPEN GRATING TOPS.

C. FOR DESCRIPTION AND RATINGS OF ITEMS INDICATED ROMAN NUMERAL FLAGS, SEE DEVICE RATINGS SCHEDULES.

D. NOT USED.

E. PROVIDE SEPARATE 120/24 VAC CONTROL TRANSFORMER FOR PUMP PROTECTION MODULE POWER.

F. POWER FACTOR CORRECTION CAPACITOR IS REQUIRED FOR EACH PUMP RATED AT 20 HP OR GREATER. MOUNT CAPACITORS EXTERNAL TO MCC WITHIN THE CONTROL BUILDING.

G. THE DESIGN ENGINEER SHALL INCORPORATE ONLY THE NECESSARY STANDARD GUIDELINE DRAWINGS AND DETAILS INTO HIS PROJECT CONTRACT DOCUMENTATION PACKAGE, AND SHALL ADJUST PAGE NUMBERS AND CROSS REFERENCING ACCORDINGLY.

H. THE DESIGN ENGINEER SHALL CONSULT THE CITY OF HOUSTON DESIGN GUIDELINES MANUAL, THE ENGINEERING DESIGN MANUAL, AND THE MASTER SPECIFICATIONS FOR FURTHER INSTRUCTIONS AND INFORMATION PERTINENT TO THESE STANDARD DESIGN GUIDELINE DRAWINGS.

I. THE DESIGN ENGINEER SHALL REMOVE THESE NOTES, ALL REFERENCES TO THESE NOTES, AND ANY OTHER EXTRANEOUS INFORMATION FROM THE DESIGN GUIDELINE DRAWINGS. DESIGN ENGINEER SHALL PROVIDE ANY NOTES OR OTHER APPROPRIATE INFORMATION NECESSARY TO COMPLETE THE LIFT STATION DESIGN.

NOTES:

1. FOR DESCRIPTION AND RATINGS OF ITEMS INDICATED WITH ROMAN NUMERAL FLAGS, SEE DEVICE RATINGS SCHEDULE.
2. CONTRACTOR TO COORDINATE POWER FACTOR CORRECTION CAPACITOR SIZE WITH PUMP MANUFACTURER. MINIMUM 95% POWER FACTOR CORRECTION AT FULL LOAD.
3. CONTRACTOR SHALL VERIFY ACTUAL AMPERAGES OF MOTORS AND SIZE STARTERS, MOTOR CIRCUIT PROTECTORS, ETC. ACCORDINGLY.
4. REFER TO SPEC SECTION 16120 FOR CONDUCTOR COLOR CODE.
5. THE POWER SUPPLY SHALL FEED THE 24VDC I/O.
6. PROVIDE FUSE SIZE ACCORDING TO MANUFACTURER'S REQUIREMENTS.
7. NOT USED.
8. WIMAX PPU-1 & SCADA WILL BE PROVIDED BY CONTRACTOR TO RUN CONDUITS & WIRES.
9. THREE ETHERNET CABLES FOR RADIO (P3), CAMERA 1 (P1), CAMERA 2 (P2).
10. WHERE USED 320 SERIES METER, USE 400A AND BELOW DISCONNECT.
11. POE CABLES TO RADIO AND CAMERAS.

3 PUMP OUTDOOR CONTROL PANEL SINGLE LINE DIAGRAM

PROJECT NO. R-000265-0XXX-X

TITLE CITY OF HOUSTON DESIGN GUIDELINE DRAWINGS FOR SUBMERSIBLE LIFT STATIONS

CITY OF HOUSTON
DEPARTMENT OF PUBLIC WORKS AND ENGINEERING
ENGINEERING AND CONSTRUCTION

DESIGN ENGINEER TO INCLUDE COH STANDARD TITLE BLOCK ON ALL DRAWINGS, SEE STANDARD TITLE BLOCK DETAIL ON SHEET Z0C0X

REV. NO.	DESCRIPTION	APP'D	DATE

SCALE: NONE
SUBMITTED:
DATE:
SURVEY BY:
FIELD BOOK NO.
DESIGNED BY:
DRAWN BY:
SHEET NO. OF SHEETS
DWG. NO. X0E10-0516

CADD DWG. FILE NO. : X0E10-OD3P.DWG

COHSTD.BDR

0 1 2 3 ORIGINAL SCALE IN INCHES FOR REDUCED PLANS

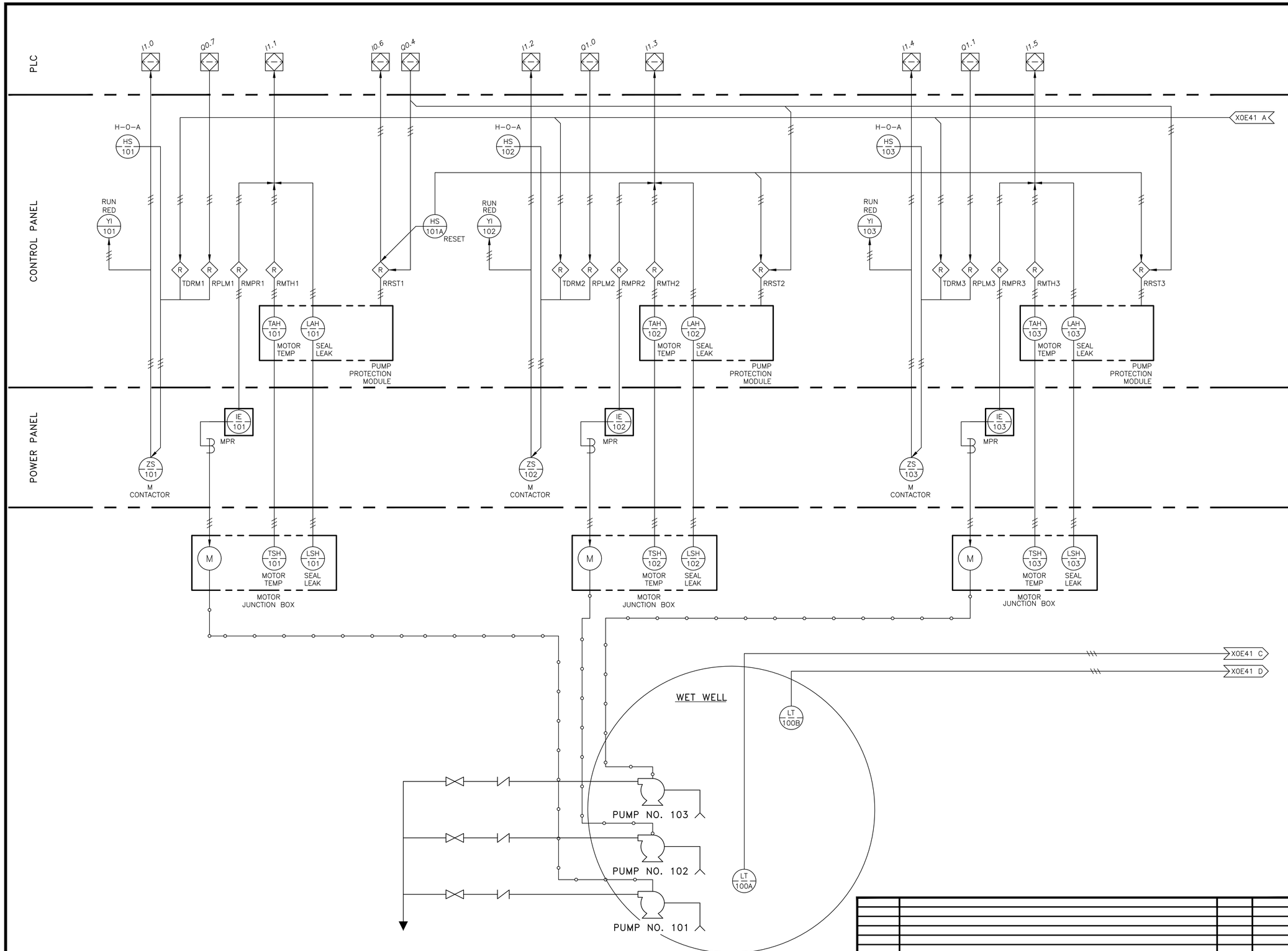

NOTES TO DESIGN ENGINEER:

A. THESE LIFT STATION DRAWINGS ARE CONSIDERED TO BE DESIGN GUIDELINES FOR THE CONSTRUCTION OF CITY OF HOUSTON WASTEWATER SUBMERSIBLE LIFT STATIONS. THEIR INTENDED USE IS AS A FRAMEWORK FOR THE CONTRACTED DESIGN ENGINEER IN DEVELOPING SPECIFIC LIFT STATION DESIGNS.

IT IS THE RESPONSIBILITY OF THE CONTRACTED DESIGN ENGINEER TO VERIFY THE COMPLETENESS AND ACCURACY OF THE INFORMATION HEREIN CONTAINED AND TO ADJUST ACCORDING TO PROJECT SPECIFIC REQUIREMENTS.

B. THE DESIGN ENGINEER SHALL DELETE TERMINAL DESIGNATION AND INTERCONNECTING WIRING BETWEEN WHEN BOTH PANELS ARE HOUSED IN A COMMON, FACTORY PRE-WIRED ENCLOSURE.

C. THE DESIGN ENGINEER SHALL INCORPORATE ONLY THE NECESSARY STANDARD GUIDELINE DRAWINGS AND DETAILS INTO HIS PROJECT CONTRACT DOCUMENTATION PACKAGE, AND SHALL ADJUST PAGE NUMBERS AND CROSS REFERENCING ACCORDINGLY.

D. THE DESIGN ENGINEER SHALL CONSULT THE CITY OF HOUSTON DESIGN GUIDELINES MANUAL, THE ENGINEERING DESIGN MANUAL, AND THE MASTER SPECIFICATIONS FOR FURTHER INSTRUCTIONS AND INFORMATION PERTINENT TO THESE STANDARD DESIGN GUIDELINE DRAWINGS.

E. THE DESIGN ENGINEER SHALL REMOVE THESE NOTES, ALL REFERENCES TO THESE NOTES, AND ANY OTHER EXTRANEOUS INFORMATION FROM THE DESIGN GUIDELINE DRAWINGS. DESIGN ENGINEER SHALL PROVIDE ANY NOTES OR OTHER APPROPRIATE INFORMATION NECESSARY TO COMPLETE THE LIFT STATION DESIGN.

3 PUMP OUTDOOR
PROCESS &
INSTRUMENTATION DIAGRAM

PROJECT NO. R-000265-0XXX-X

TITLE CITY OF HOUSTON
DESIGN GUIDELINE DRAWINGS
FOR SUBMERSIBLE LIFT STATIONS

CITY OF HOUSTON
DEPARTMENT OF PUBLIC WORKS AND ENGINEERING
ENGINEERING AND CONSTRUCTION

DESIGN ENGINEER TO INCLUDE COH STANDARD TITLE BLOCK ON ALL DRAWINGS, SEE STANDARD TITLE BLOCK DETAIL ON SHEET Z0C0X

REV. NO.	DESCRIPTION	APP'D	DATE

SCALE: NONE
SUBMITTED:
DATE:
SURVEY BY:
FIELD BOOK NO.
DESIGNED BY:
DRAWN BY:
SHEET NO. OF SHEETS
DWG. NO. X0E40-0516

CADD DWG. FILE NO. : X0E40-0D3P.DWG

COHSTD.BDR

0 1 2 3 ORIGINAL SCALE IN INCHES FOR REDUCED PLANS

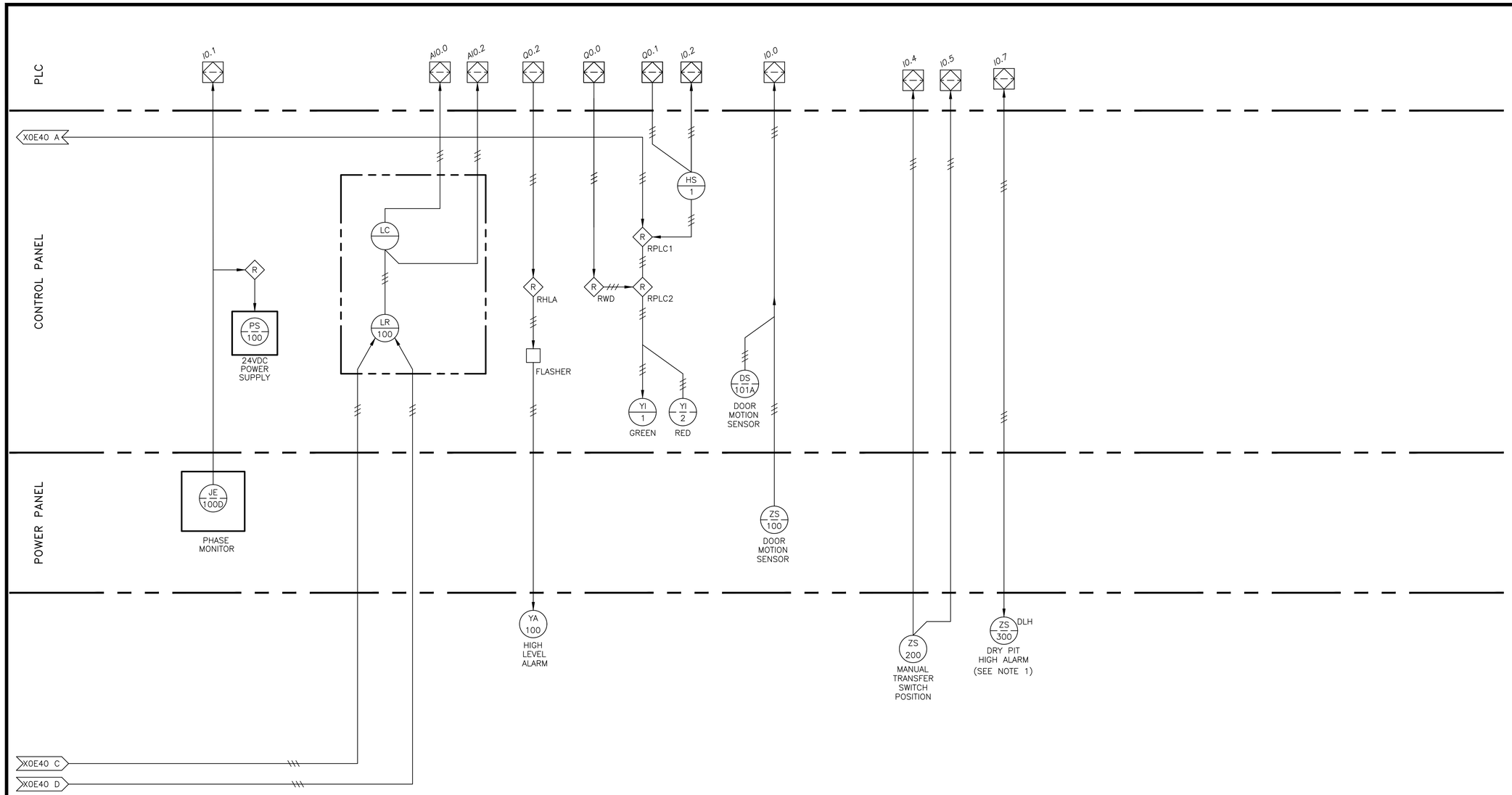

NOTES TO DESIGN ENGINEER:

A. THESE LIFT STATION DRAWINGS ARE CONSIDERED TO BE DESIGN GUIDELINES FOR THE CONSTRUCTION OF CITY OF HOUSTON WASTEWATER SUBMERSIBLE LIFT STATIONS. THEIR INTENDED USE IS AS A FRAMEWORK FOR THE CONTRACTED DESIGN ENGINEER IN DEVELOPING SPECIFIC LIFT STATION DESIGNS.

IT IS THE RESPONSIBILITY OF THE CONTRACTED DESIGN ENGINEER TO VERIFY THE COMPLETENESS AND ACCURACY OF THE INFORMATION HEREIN CONTAINED AND TO ADJUST ACCORDING TO PROJECT SPECIFIC REQUIREMENTS.

B. THE DESIGN ENGINEER SHALL DELETE TERMINAL DESIGNATION AND INTERCONNECTING WIRING BETWEEN WHEN BOTH PANELS ARE HOUSED IN A COMMON, FACTORY PRE-WIRED ENCLOSURE.

C. THE DESIGN ENGINEER SHALL INCORPORATE ONLY THE NECESSARY STANDARD GUIDELINE DRAWINGS AND DETAILS INTO HIS PROJECT CONTRACT DOCUMENTATION PACKAGE, AND SHALL ADJUST PAGE NUMBERS AND CROSS REFERENCING ACCORDINGLY.

D. THE DESIGN ENGINEER SHALL CONSULT THE CITY OF HOUSTON DESIGN GUIDELINES MANUAL, THE ENGINEERING DESIGN MANUAL, AND THE MASTER SPECIFICATIONS FOR FURTHER INSTRUCTIONS AND INFORMATION PERTINENT TO THESE STANDARD DESIGN GUIDELINE DRAWINGS.

E. THE DESIGN ENGINEER SHALL REMOVE THESE NOTES, ALL REFERENCES TO THESE NOTES, AND ANY OTHER EXTRANEOUS INFORMATION FROM THE DESIGN GUIDELINE DRAWINGS. DESIGN ENGINEER SHALL PROVIDE ANY NOTES OR OTHER APPROPRIATE INFORMATION NECESSARY TO COMPLETE THE LIFT STATION DESIGN.

NOTES:
1. DRY/WET PIT APPLICATION ONLY.

3 PUMP OUTDOOR
PROCESS &
INSTRUMENTATION DIAGRAM

PROJECT NO.
R-000265-0XXX-X

TITLE CITY OF HOUSTON
DESIGN GUIDELINE DRAWINGS
FOR SUBMERSIBLE LIFT STATIONS

CITY OF HOUSTON
DEPARTMENT OF PUBLIC WORKS AND ENGINEERING
ENGINEERING AND CONSTRUCTION

DESIGN ENGINEER TO INCLUDE COH STANDARD TITLE BLOCK ON ALL DRAWINGS, SEE STANDARD TITLE BLOCK DETAIL ON SHEET Z0C0X

REV. NO.	DESCRIPTION	APP'D	DATE

SCALE: NONE
SUBMITTED:
DATE:
SURVEY BY:
FIELD BOOK NO.
DESIGNED BY:
DRAWN BY:
SHEET NO. OF SHEETS
DWG. NO.
X0E41-0516

CADD DWG. FILE NO. :
X0E41-OD3P.DWG

COHSTD.BDR

0 1 2 3 ORIGINAL SCALE IN INCHES FOR REDUCED PLANS

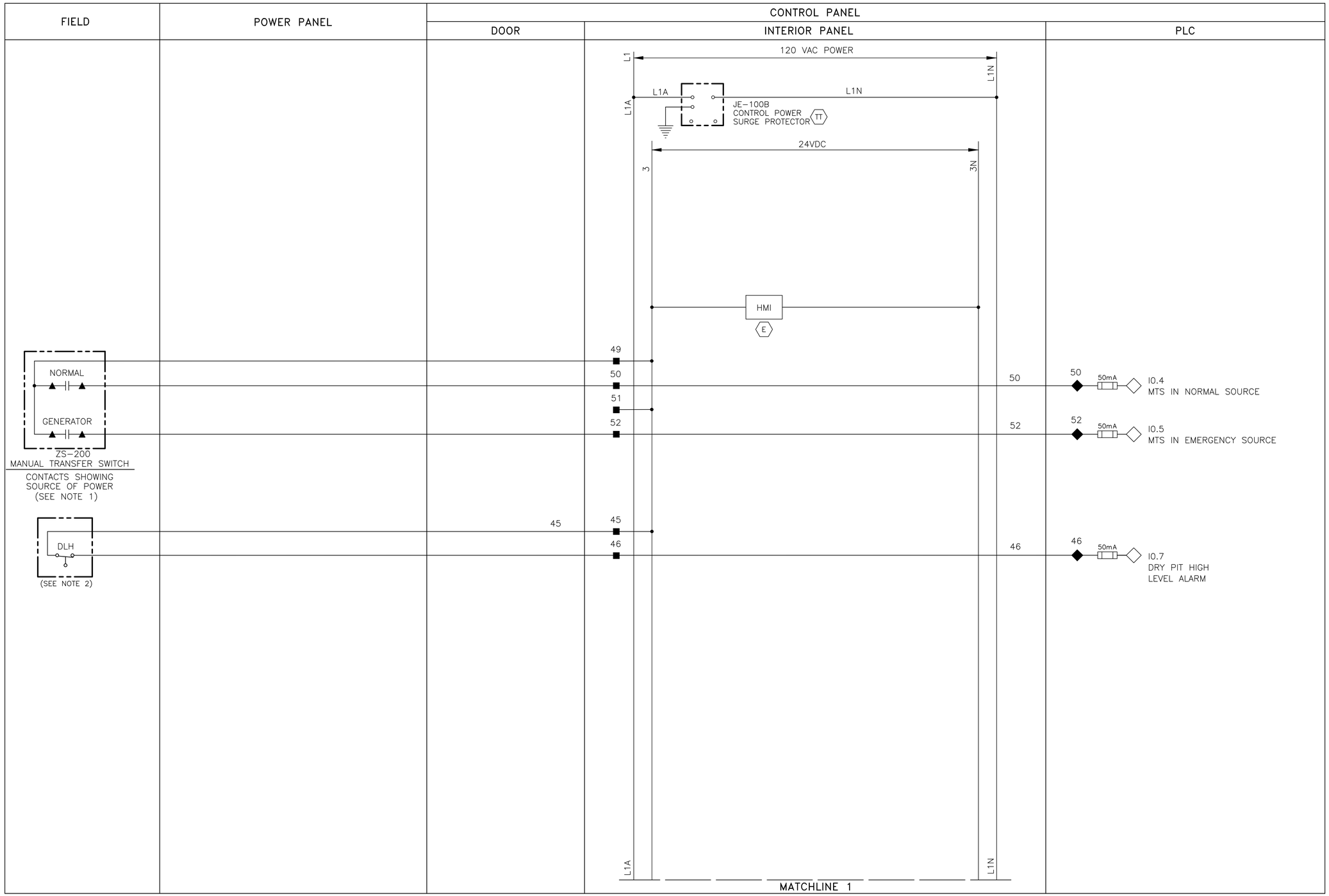

NOTES TO DESIGN ENGINEER:

A. THESE LIFT STATION DRAWINGS ARE CONSIDERED TO BE DESIGN GUIDELINES FOR THE CONSTRUCTION OF CITY OF HOUSTON WASTEWATER SUBMERSIBLE LIFT STATIONS. THEIR INTENDED USE IS AS A FRAMEWORK FOR THE CONTRACTED DESIGN ENGINEER IN DEVELOPING SPECIFIC LIFT STATION DESIGNS.

IT IS THE RESPONSIBILITY OF THE CONTRACTED DESIGN ENGINEER TO VERIFY THE COMPLETENESS AND ACCURACY OF THE INFORMATION HEREIN CONTAINED AND TO ADJUST ACCORDING TO PROJECT SPECIFIC REQUIREMENTS.

B. EACH PUMP CONTROL SHALL BE INDIVIDUALLY FUSED. (24VDC, 120VAC)

C. THE DESIGN ENGINEER SHALL INCORPORATE ONLY THE NECESSARY STANDARD GUIDELINE DRAWINGS AND DETAILS INTO HIS PROJECT CONTRACT DOCUMENTATION PACKAGE, AND SHALL ADJUST PAGE NUMBERS AND CROSS REFERENCING ACCORDINGLY.

D. THE DESIGN ENGINEER SHALL CONSULT THE CITY OF HOUSTON DESIGN GUIDELINES MANUAL, THE ENGINEERING DESIGN MANUAL, AND THE MASTER SPECIFICATIONS FOR FURTHER INSTRUCTIONS AND INFORMATION PERTINENT TO THESE STANDARD DESIGN GUIDELINE DRAWINGS.

E. THE DESIGN ENGINEER SHALL REMOVE THESE NOTES, ALL REFERENCES TO THESE NOTES, AND ANY OTHER EXTRANEOUS INFORMATION FROM THE DESIGN GUIDELINE DRAWINGS. DESIGN ENGINEER SHALL PROVIDE ANY NOTES OR OTHER APPROPRIATE INFORMATION NECESSARY TO COMPLETE THE LIFT STATION DESIGN.

NOTES:

1. PROVIDE MANUAL TRANSFER SWITCH DRY CONTACT.
2. DRY/WET PIT APPLICATION ONLY.

LEGEND

- △ DEVICE OR FIELD TERMINAL LOCATED AT MOTOR
- ✳ DEVICE OR FIELD TERMINAL LOCATED REMOTE
- □ DEVICE OR FIELD TERMINAL LOCATED AT MCC/POWER PANEL
- ■ FIELD TERMINAL LOCATED AT CONTROL PANEL
- ▲ REMOTE TERMINAL
- ● DEVICE TERMINAL NO.
- ◆ PLC INTERFACE TERMINAL

REV. NO.	DESCRIPTION	APP'D	DATE

3 PUMP OUTDOOR
CONTROL PANEL
CONTROL WIRING DIAGRAM

PROJECT NO. R-000265-0XXX-X

TITLE CITY OF HOUSTON
DESIGN GUIDELINE DRAWINGS
FOR SUBMERSIBLE LIFT STATIONS

CITY OF HOUSTON
DEPARTMENT OF PUBLIC WORKS AND ENGINEERING
ENGINEERING AND CONSTRUCTION

DESIGN ENGINEER TO INCLUDE COH STANDARD TITLE BLOCK ON ALL DRAWINGS, SEE STANDARD TITLE BLOCK DETAIL ON SHEET Z0C0X

SCALE: NONE
SUBMITTED:
DATE:
SURVEY BY:
FIELD BOOK NO.
DESIGNED BY:
DRAWN BY:
SHEET NO. OF SHEETS
DWG. NO. X0E50-0516

CADD DWG. FILE NO. : X0E50-0D3P.DWG

COHSTD.BDR

0 1 2 3 ORIGINAL SCALE IN INCHES FOR REDUCED PLANS

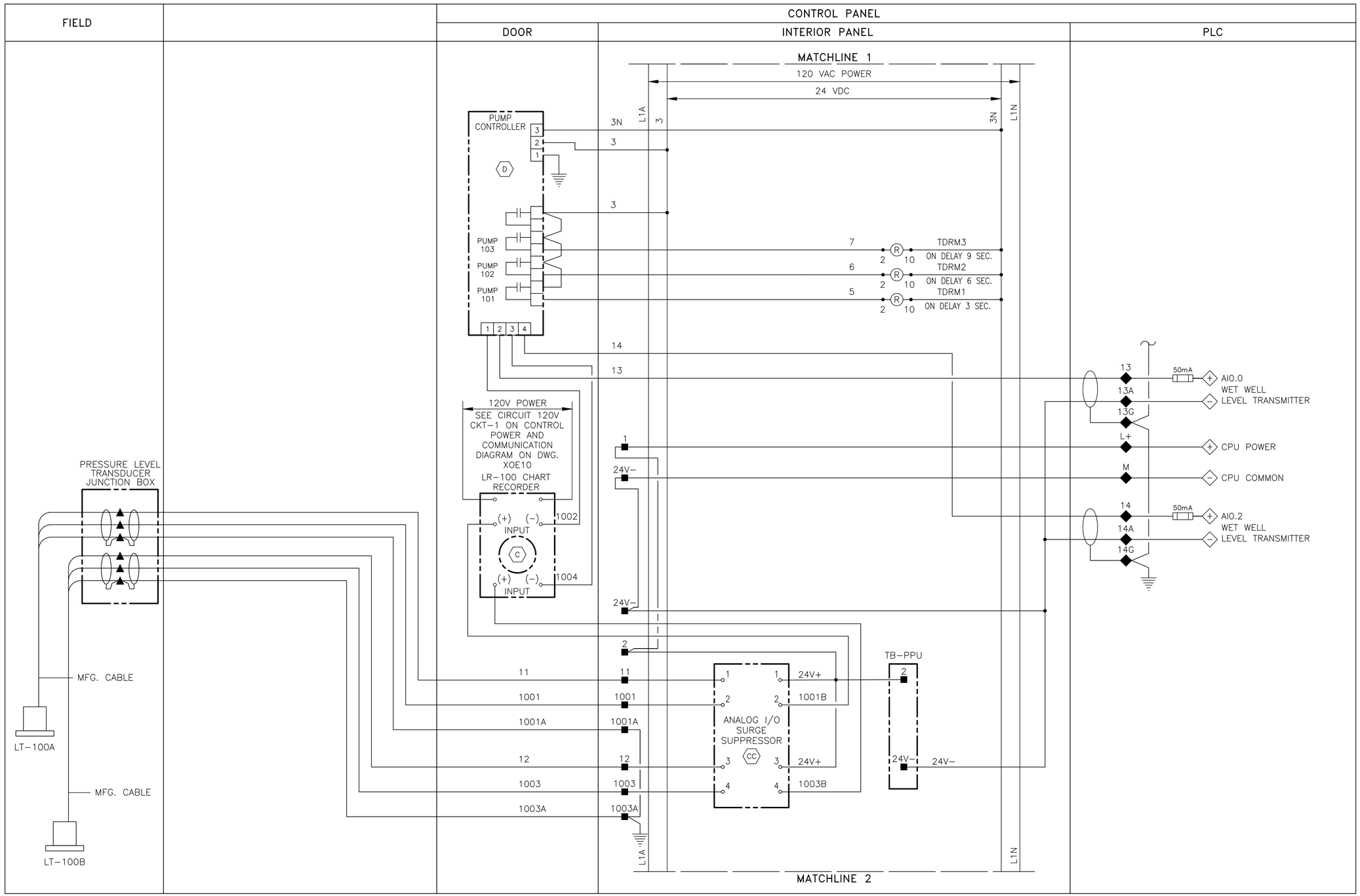

LEGEND

- △ DEVICE OR FIELD TERMINAL LOCATED AT MOTOR
- ✳ DEVICE OR FIELD TERMINAL LOCATED REMOTE
- □ DEVICE OR FIELD TERMINAL LOCATED AT MCC/POWER PANEL
- ■ FIELD TERMINAL LOCATED AT CONTROL PANEL
- ▲ REMOTE TERMINAL
- ● DEVICE TERMINAL NO.
- ◆ PLC INTERFACE TERMINAL

NOTES TO DESIGN ENGINEER:

A. THESE LIFT STATION DRAWINGS ARE CONSIDERED TO BE DESIGN GUIDELINES FOR THE CONSTRUCTION OF CITY OF HOUSTON WASTEWATER SUBMERSIBLE LIFT STATIONS. THEIR INTENDED USE IS AS A FRAMEWORK FOR THE CONTRACTED DESIGN ENGINEER IN DEVELOPING SPECIFIC LIFT STATION DESIGNS.

IT IS THE RESPONSIBILITY OF THE CONTRACTED DESIGN ENGINEER TO VERIFY THE COMPLETENESS AND ACCURACY OF THE INFORMATION HEREIN CONTAINED AND TO ADJUST ACCORDING TO PROJECT SPECIFIC REQUIREMENTS.

B. EACH PUMP CONTROL SHALL BE INDIVIDUALLY FUSED. (24VDC, 120VAC)

C. THE DESIGN ENGINEER SHALL INCORPORATE ONLY THE NECESSARY STANDARD GUIDELINE DRAWINGS AND DETAILS INTO HIS PROJECT CONTRACT DOCUMENTATION PACKAGE, AND SHALL ADJUST PAGE NUMBERS AND CROSS REFERENCING ACCORDINGLY.

D. THE DESIGN ENGINEER SHALL CONSULT THE CITY OF HOUSTON DESIGN GUIDELINES MANUAL, THE ENGINEERING DESIGN MANUAL, AND THE MASTER SPECIFICATIONS FOR FURTHER INSTRUCTIONS AND INFORMATION PERTINENT TO THESE STANDARD DESIGN GUIDELINE DRAWINGS.

E. THE DESIGN ENGINEER SHALL REMOVE THESE NOTES, ALL REFERENCES TO THESE NOTES, AND ANY OTHER EXTRANEOUS INFORMATION FROM THE DESIGN GUIDELINE DRAWINGS. DESIGN ENGINEER SHALL PROVIDE ANY NOTES OR OTHER APPROPRIATE INFORMATION NECESSARY TO COMPLETE THE LIFT STATION DESIGN.

3 PUMP OUTDOOR
CONTROL PANEL
CONTROL WIRING DIAGRAM

PROJECT NO.
R-000265-0XXX-X

TITLE
CITY OF HOUSTON
DESIGN GUIDELINE DRAWINGS
FOR SUBMERSIBLE LIFT STATIONS

CITY OF HOUSTON
DEPARTMENT OF PUBLIC WORKS AND ENGINEERING
ENGINEERING AND CONSTRUCTION

DESIGN ENGINEER TO INCLUDE COH STANDARD TITLE BLOCK ON ALL DRAWINGS, SEE STANDARD TITLE BLOCK DETAIL ON SHEET Z0C0X

REV. NO.	DESCRIPTION	APP'D	DATE

SCALE: NONE
SUBMITTED:
DATE:
SURVEY BY:
FIELD BOOK NO.
DESIGNED BY:
DRAWN BY:
SHEET NO. OF SHEETS
DWG. NO. X0E51-0516

CADD DWG. FILE NO. : X0E51-0D3P.DWG

COHSTD.BDR

0 1 2 3 ORIGINAL SCALE IN INCHES FOR REDUCED PLANS

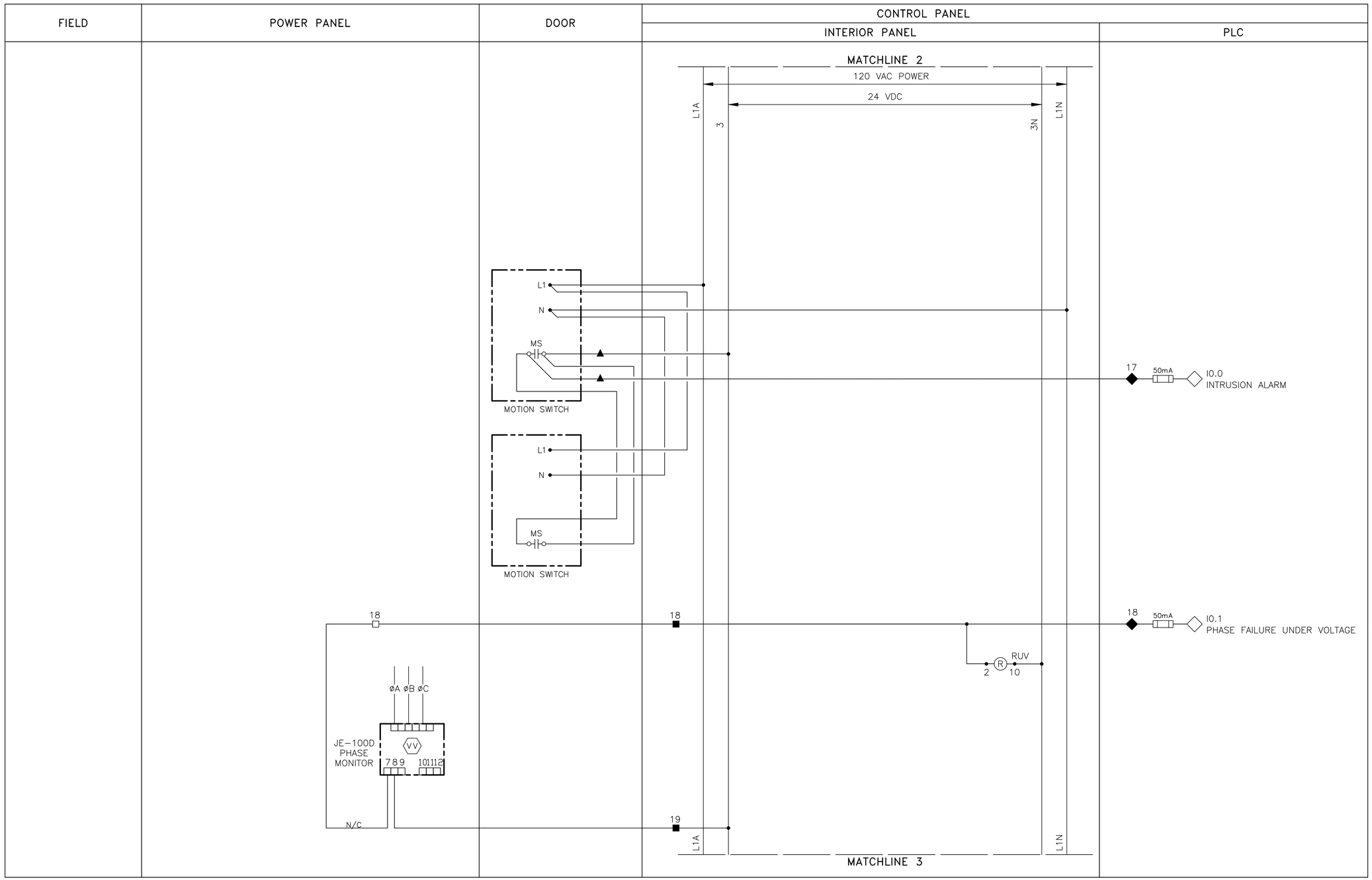

LEGEND

- △ DEVICE OR FIELD TERMINAL LOCATED AT MOTOR
- ✳ DEVICE OR FIELD TERMINAL LOCATED REMOTE
- □ DEVICE OR FIELD TERMINAL LOCATED AT MCC/POWER PANEL
- ■ FIELD TERMINAL LOCATED AT CONTROL PANEL
- ▲ REMOTE TERMINAL
- ● DEVICE TERMINAL NO.
- ◆ PLC INTERFACE TERMINAL

NOTES TO DESIGN ENGINEER:

A. THESE LIFT STATION DRAWINGS ARE CONSIDERED TO BE DESIGN GUIDELINES FOR THE CONSTRUCTION OF CITY OF HOUSTON WASTEWATER SUBMERSIBLE LIFT STATIONS. THEIR INTENDED USE IS AS A FRAMEWORK FOR THE CONTRACTED DESIGN ENGINEER IN DEVELOPING SPECIFIC LIFT STATION DESIGNS.

IT IS THE RESPONSIBILITY OF THE CONTRACTED DESIGN ENGINEER TO VERIFY THE COMPLETENESS AND ACCURACY OF THE INFORMATION HEREIN CONTAINED AND TO ADJUST ACCORDING TO PROJECT SPECIFIC REQUIREMENTS.

B. EACH PUMP CONTROL SHALL BE INDIVIDUALLY FUSED. (24VDC, 120VAC)

C. THE DESIGN ENGINEER SHALL INCORPORATE ONLY THE NECESSARY STANDARD GUIDELINE DRAWINGS AND DETAILS INTO HIS PROJECT CONTRACT DOCUMENTATION PACKAGE, AND SHALL ADJUST PAGE NUMBERS AND CROSS REFERENCING ACCORDINGLY.

D. THE DESIGN ENGINEER SHALL CONSULT THE CITY OF HOUSTON DESIGN GUIDELINES MANUAL, THE ENGINEERING DESIGN MANUAL, AND THE MASTER SPECIFICATIONS FOR FURTHER INSTRUCTIONS AND INFORMATION PERTINENT TO THESE STANDARD DESIGN GUIDELINE DRAWINGS.

E. THE DESIGN ENGINEER SHALL REMOVE THESE NOTES, ALL REFERENCES TO THESE NOTES, AND ANY OTHER EXTRANEOUS INFORMATION FROM THE DESIGN GUIDELINE DRAWINGS. DESIGN ENGINEER SHALL PROVIDE ANY NOTES OR OTHER APPROPRIATE INFORMATION NECESSARY TO COMPLETE THE LIFT STATION DESIGN.

NOTES:

1. PROVIDE ONE LIMIT SWITCH PER EXTERIOR CONTROL PANEL AND POWER PANEL DOOR, WIRED IN PARALLEL.

3 PUMP OUTDOOR
CONTROL PANEL
CONTROL WIRING DIAGRAM

PROJECT NO. R-000265-0XXX-X

TITLE CITY OF HOUSTON
DESIGN GUIDELINE DRAWINGS
FOR SUBMERSIBLE LIFT STATIONS

CITY OF HOUSTON
DEPARTMENT OF PUBLIC WORKS AND ENGINEERING
ENGINEERING AND CONSTRUCTION

DESIGN ENGINEER TO INCLUDE COH STANDARD TITLE BLOCK ON ALL DRAWINGS, SEE STANDARD TITLE BLOCK DETAIL ON SHEET Z0C0X

REV. NO.	DESCRIPTION	APP'D	DATE

SCALE: NONE
SUBMITTED:
DATE:
SURVEY BY:
FIELD BOOK NO.
DESIGNED BY:
DRAWN BY:
SHEET NO. OF SHEETS
DWG. NO. X0E52-0516

CADD DWG. FILE NO. : X0E52-OD3P.DWG

COHSTD.BDR

0 1 2 3 ORIGINAL SCALE IN INCHES FOR REDUCED PLANS

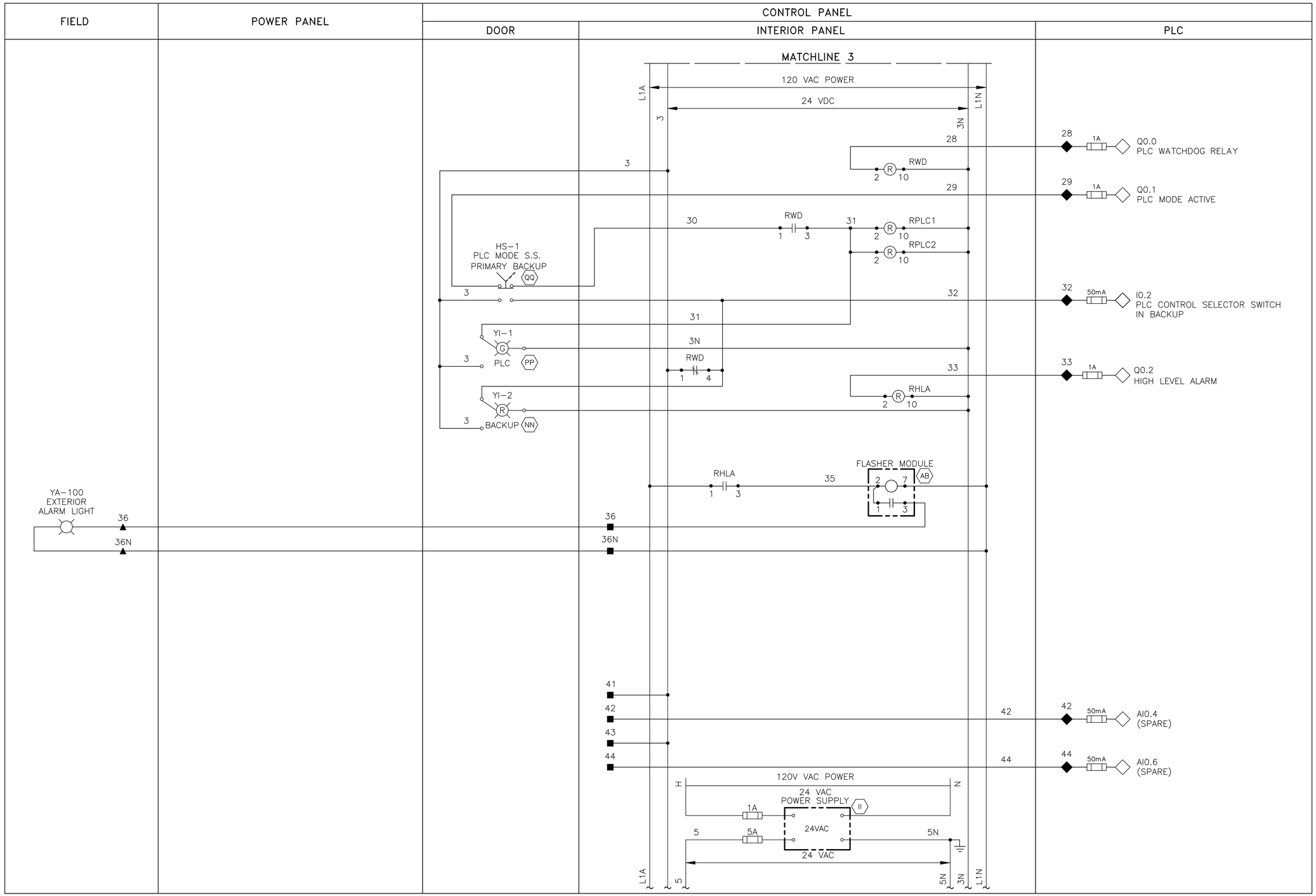

LEGEND

- △ DEVICE OR FIELD TERMINAL LOCATED AT MOTOR
- ✳ DEVICE OR FIELD TERMINAL LOCATED REMOTE
- □ DEVICE OR FIELD TERMINAL LOCATED AT MCC/POWER PANEL
- ■ FIELD TERMINAL LOCATED AT CONTROL PANEL
- ▲ REMOTE TERMINAL
- ● DEVICE TERMINAL NO.
- ◆ PLC INTERFACE TERMINAL

REV. NO.	DESCRIPTION	APP'D	DATE

NOTES TO DESIGN ENGINEER:

A. THESE LIFT STATION DRAWINGS ARE CONSIDERED TO BE DESIGN GUIDELINES FOR THE CONSTRUCTION OF CITY OF HOUSTON WASTEWATER SUBMERSIBLE LIFT STATIONS. THEIR INTENDED USE IS AS A FRAMEWORK FOR THE CONTRACTED DESIGN ENGINEER IN DEVELOPING SPECIFIC LIFT STATION DESIGNS.

IT IS THE RESPONSIBILITY OF THE CONTRACTED DESIGN ENGINEER TO VERIFY THE COMPLETENESS AND ACCURACY OF THE INFORMATION HEREIN CONTAINED AND TO ADJUST ACCORDING TO PROJECT SPECIFIC REQUIREMENTS.

B. EACH PUMP CONTROL SHALL BE INDIVIDUALLY FUSED. (24VDC, 120VAC)

C. THE DESIGN ENGINEER SHALL INCORPORATE ONLY THE NECESSARY STANDARD GUIDELINE DRAWINGS AND DETAILS INTO HIS PROJECT CONTRACT DOCUMENTATION PACKAGE, AND SHALL ADJUST PAGE NUMBERS AND CROSS REFERENCING ACCORDINGLY.

D. THE DESIGN ENGINEER SHALL CONSULT THE CITY OF HOUSTON DESIGN GUIDELINES MANUAL, THE ENGINEERING DESIGN MANUAL, AND THE MASTER SPECIFICATIONS FOR FURTHER INSTRUCTIONS AND INFORMATION PERTINENT TO THESE STANDARD DESIGN GUIDELINE DRAWINGS.

E. THE DESIGN ENGINEER SHALL REMOVE THESE NOTES, ALL REFERENCES TO THESE NOTES, AND ANY OTHER EXTRANEOUS INFORMATION FROM THE DESIGN GUIDELINE DRAWINGS. DESIGN ENGINEER SHALL PROVIDE ANY NOTES OR OTHER APPROPRIATE INFORMATION NECESSARY TO COMPLETE THE LIFT STATION DESIGN.

3 PUMP OUTDOOR
CONTROL PANEL
CONTROL WIRING DIAGRAM

PROJECT NO. R-000265-0XXX-X

TITLE CITY OF HOUSTON
DESIGN GUIDELINE DRAWINGS
FOR SUBMERSIBLE LIFT STATIONS

CITY OF HOUSTON
DEPARTMENT OF PUBLIC WORKS AND ENGINEERING
ENGINEERING AND CONSTRUCTION

DESIGN ENGINEER TO INCLUDE COH STANDARD TITLE BLOCK ON ALL DRAWINGS, SEE STANDARD TITLE BLOCK DETAIL ON SHEET Z0C0X

SCALE: NONE	DESIGNED BY:
SUBMITTED:	DRAWN BY:
DATE:	SHEET NO. OF SHEETS
SURVEY BY:	DWG. NO. X0E53-0516
FIELD BOOK NO.	

CADD DWG. FILE NO. : X0E53-0D3P.DWG

COHSTD.BDR

0 1 2 3 ORIGINAL SCALE IN INCHES FOR REDUCED PLANS

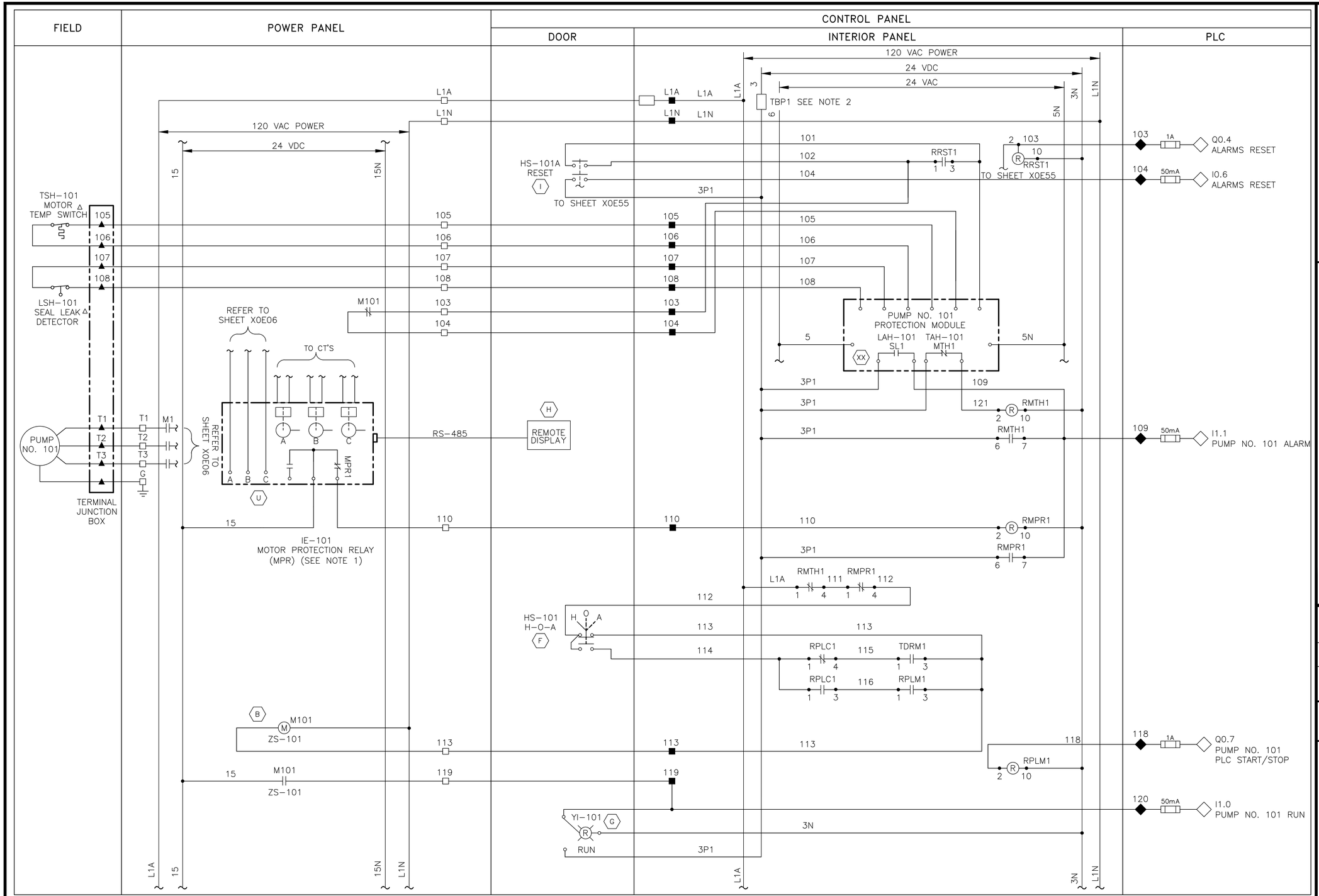

NOTES TO DESIGN ENGINEER:

A. THESE LIFT STATION DRAWINGS ARE CONSIDERED TO BE DESIGN GUIDELINES FOR THE CONSTRUCTION OF CITY OF HOUSTON WASTEWATER SUBMERSIBLE LIFT STATIONS. THEIR INTENDED USE IS AS A FRAMEWORK FOR THE CONTRACTED DESIGN ENGINEER IN DEVELOPING SPECIFIC LIFT STATION DESIGNS.

IT IS THE RESPONSIBILITY OF THE CONTRACTED DESIGN ENGINEER TO VERIFY THE COMPLETENESS AND ACCURACY OF THE INFORMATION HEREIN CONTAINED AND TO ADJUST ACCORDING TO PROJECT SPECIFIC REQUIREMENTS.

B. EACH PUMP CONTROL SHALL BE INDIVIDUALLY FUSED. (24VDC, 120VAC)

C. THE DESIGN ENGINEER SHALL INCORPORATE ONLY THE NECESSARY STANDARD GUIDELINE DRAWINGS AND DETAILS INTO HIS PROJECT CONTRACT DOCUMENTATION PACKAGE, AND SHALL ADJUST PAGE NUMBERS AND CROSS REFERENCING ACCORDINGLY.

D. THE DESIGN ENGINEER SHALL CONSULT THE CITY OF HOUSTON DESIGN GUIDELINES MANUAL, THE ENGINEERING DESIGN MANUAL, AND THE MASTER SPECIFICATIONS FOR FURTHER INSTRUCTIONS AND INFORMATION PERTINENT TO THESE STANDARD DESIGN GUIDELINE DRAWINGS.

E. THE DESIGN ENGINEER SHALL REMOVE THESE NOTES, ALL REFERENCES TO THESE NOTES, AND ANY OTHER EXTRANEOUS INFORMATION FROM THE DESIGN GUIDELINE DRAWINGS. DESIGN ENGINEER SHALL PROVIDE ANY NOTES OR OTHER APPROPRIATE INFORMATION NECESSARY TO COMPLETE THE LIFT STATION DESIGN.

NOTES:

1. MOTOR PROTECTION RELAY OUTPUT CONTACT SHOWN IS NORMALLY CLOSED WHEN RELAY IS DE-ENGERGIZED, OPEN WHEN ENERGIZED, AND CLOSED WHEN IN ALARM. VERIFY OPERATION OF RELAY PROVIDED AND ADJUST CONNECTION OF RMOR AUXILIARY RELAYS.
2. FUSED TERMINAL ON TERMINAL BLOCK TB4 SEE CONTROL POWER AND COMMUNICATION WIRING DIAGRAM. DRAWING NO. X0E10.

LEGEND

- △ DEVICE OR FIELD TERMINAL LOCATED AT MOTOR
- ✳ DEVICE OR FIELD TERMINAL LOCATED REMOTE
- □ DEVICE OR FIELD TERMINAL LOCATED AT MCC OR POWER PANEL
- ■ FIELD TERMINAL LOCATED AT CONTROL PANEL
- ▲ REMOTE TERMINAL
- ● DEVICE TERMINAL NO.
- ◆ PLC INTERFACE TERMINAL

REV. NO.	DESCRIPTION	APP'D	DATE

3 PUMP OUTDOOR
PUMP 101
CONTROL WIRING DIAGRAM

PROJECT NO. R-000265-0XXX-X

TITLE CITY OF HOUSTON
DESIGN GUIDELINE DRAWINGS
FOR SUBMERSIBLE LIFT STATIONS

CITY OF HOUSTON
DEPARTMENT OF PUBLIC WORKS AND ENGINEERING
ENGINEERING AND CONSTRUCTION

DESIGN ENGINEER TO INCLUDE COH STANDARD TITLE BLOCK ON ALL DRAWINGS, SEE STANDARD TITLE BLOCK DETAIL ON SHEET Z0C0X

SCALE: NONE
SUBMITTED:
DATE:
SURVEY BY:
FIELD BOOK NO.
DESIGNED BY:
DRAWN BY:
SHEET NO. OF SHEETS
DWG. NO. X0E54-0516

CADD DWG. FILE NO. : X0E54-0D3P.DWG

COHSTD.BDR

0 1 2 3 ORIGINAL SCALE IN INCHES FOR REDUCED PLANS

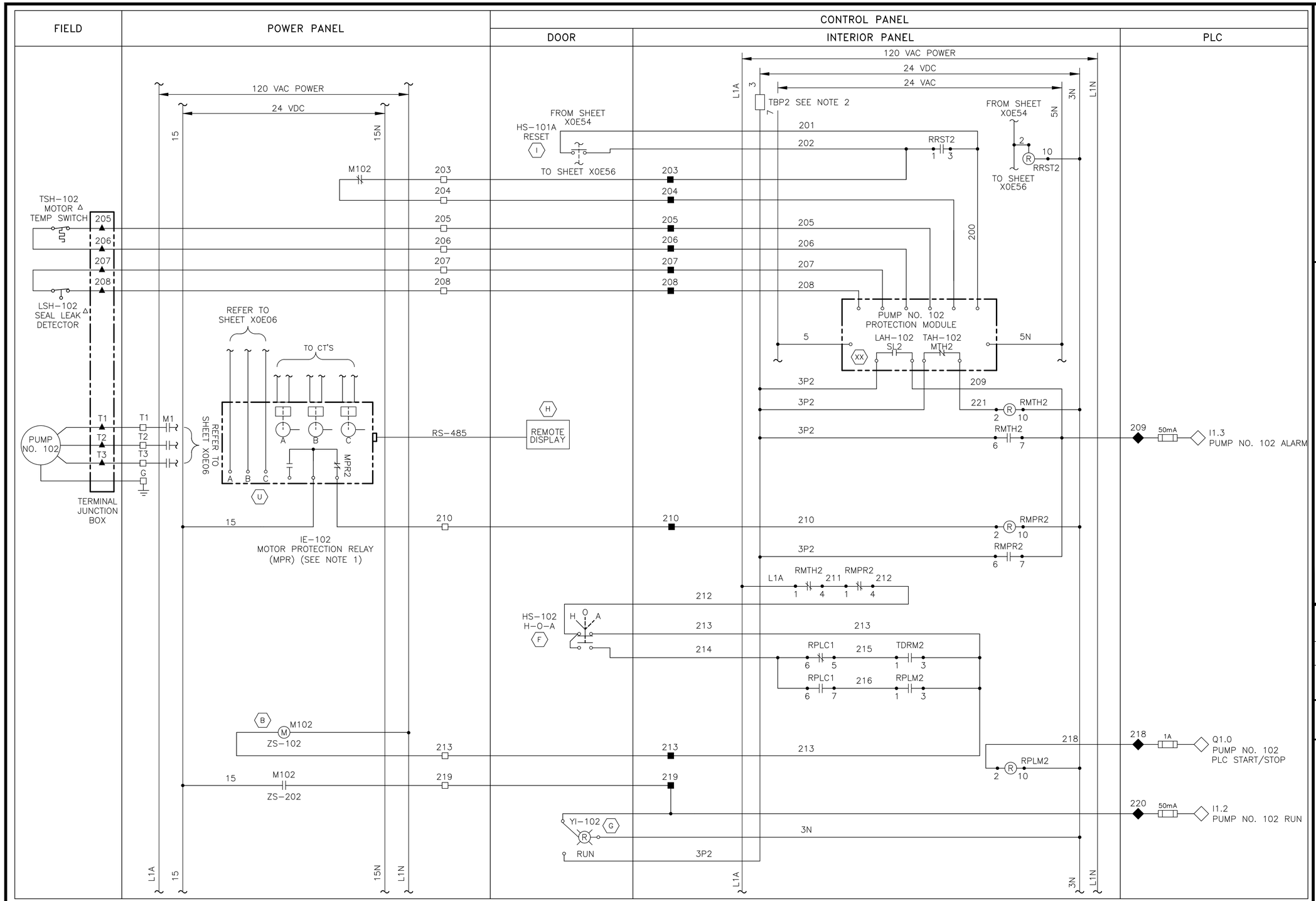

LEGEND

- △ DEVICE OR FIELD TERMINAL LOCATED AT MOTOR
- ✳ DEVICE OR FIELD TERMINAL LOCATED REMOTE
- □ DEVICE OR FIELD TERMINAL LOCATED AT MCC OR POWER PANEL
- ■ FIELD TERMINAL LOCATED AT CONTROL PANEL
- ▲ REMOTE TERMINAL
- ● DEVICE TERMINAL NO.
- ◆ PLC INTERFACE TERMINAL

NOTES TO DESIGN ENGINEER:

A. THESE LIFT STATION DRAWINGS ARE CONSIDERED TO BE DESIGN GUIDELINES FOR THE CONSTRUCTION OF CITY OF HOUSTON WASTEWATER SUBMERSIBLE LIFT STATIONS. THEIR INTENDED USE IS AS A FRAMEWORK FOR THE CONTRACTED DESIGN ENGINEER IN DEVELOPING SPECIFIC LIFT STATION DESIGNS.

IT IS THE RESPONSIBILITY OF THE CONTRACTED DESIGN ENGINEER TO VERIFY THE COMPLETENESS AND ACCURACY OF THE INFORMATION HEREIN CONTAINED AND TO ADJUST ACCORDING TO PROJECT SPECIFIC REQUIREMENTS.

B. EACH PUMP CONTROL SHALL BE INDIVIDUALLY FUSED. (24VDC, 120VAC)

C. THE DESIGN ENGINEER SHALL INCORPORATE ONLY THE NECESSARY STANDARD GUIDELINE DRAWINGS AND DETAILS INTO HIS PROJECT CONTRACT DOCUMENTATION PACKAGE, AND SHALL ADJUST PAGE NUMBERS AND CROSS REFERENCING ACCORDINGLY.

D. THE DESIGN ENGINEER SHALL CONSULT THE CITY OF HOUSTON DESIGN GUIDELINES MANUAL, THE ENGINEERING DESIGN MANUAL, AND THE MASTER SPECIFICATIONS FOR FURTHER INSTRUCTIONS AND INFORMATION PERTINENT TO THESE STANDARD DESIGN GUIDELINE DRAWINGS.

E. THE DESIGN ENGINEER SHALL REMOVE THESE NOTES, ALL REFERENCES TO THESE NOTES, AND ANY OTHER EXTRANEOUS INFORMATION FROM THE DESIGN GUIDELINE DRAWINGS. DESIGN ENGINEER SHALL PROVIDE ANY NOTES OR OTHER APPROPRIATE INFORMATION NECESSARY TO COMPLETE THE LIFT STATION DESIGN.

NOTES:

1. MOTOR PROTECTION RELAY OUTPUT CONTACT SHOWN IS NORMALLY CLOSED WHEN RELAY IS DE-ENGERGIZED, OPEN WHEN ENERGIZED, AND CLOSED WHEN IN ALARM. VERIFY OPERATION OF RELAY PROVIDED AND ADJUST CONNECTION OF RMOR AUXILIARY RELAYS.
2. FUSED TERMINAL ON TERMINAL BLOCK TB4 SEE CONTROL POWER AND COMMUNICATION WIRING DIAGRAM. DRAWING NO. X0E10.

3 PUMP OUTDOOR
PUMP 102
CONTROL WIRING DIAGRAM

PROJECT NO. R-000265-0XXX-X

TITLE CITY OF HOUSTON
DESIGN GUIDELINE DRAWINGS
FOR SUBMERSIBLE LIFT STATIONS

CITY OF HOUSTON
DEPARTMENT OF PUBLIC WORKS AND ENGINEERING
ENGINEERING AND CONSTRUCTION

DESIGN ENGINEER TO INCLUDE COH STANDARD TITLE BLOCK ON ALL DRAWINGS, SEE STANDARD TITLE BLOCK DETAIL ON SHEET Z0C0X

REV. NO.	DESCRIPTION	APP'D	DATE

SCALE: NONE
SUBMITTED:
DATE:
SURVEY BY:
FIELD BOOK NO.
DESIGNED BY:
DRAWN BY:
SHEET NO. OF SHEETS
DWG. NO. X0E55-0516

CADD DWG. FILE NO. : X0E55-0D3P.DWG

COHSTD.BDR

0 1 2 3 ORIGINAL SCALE IN INCHES FOR REDUCED PLANS

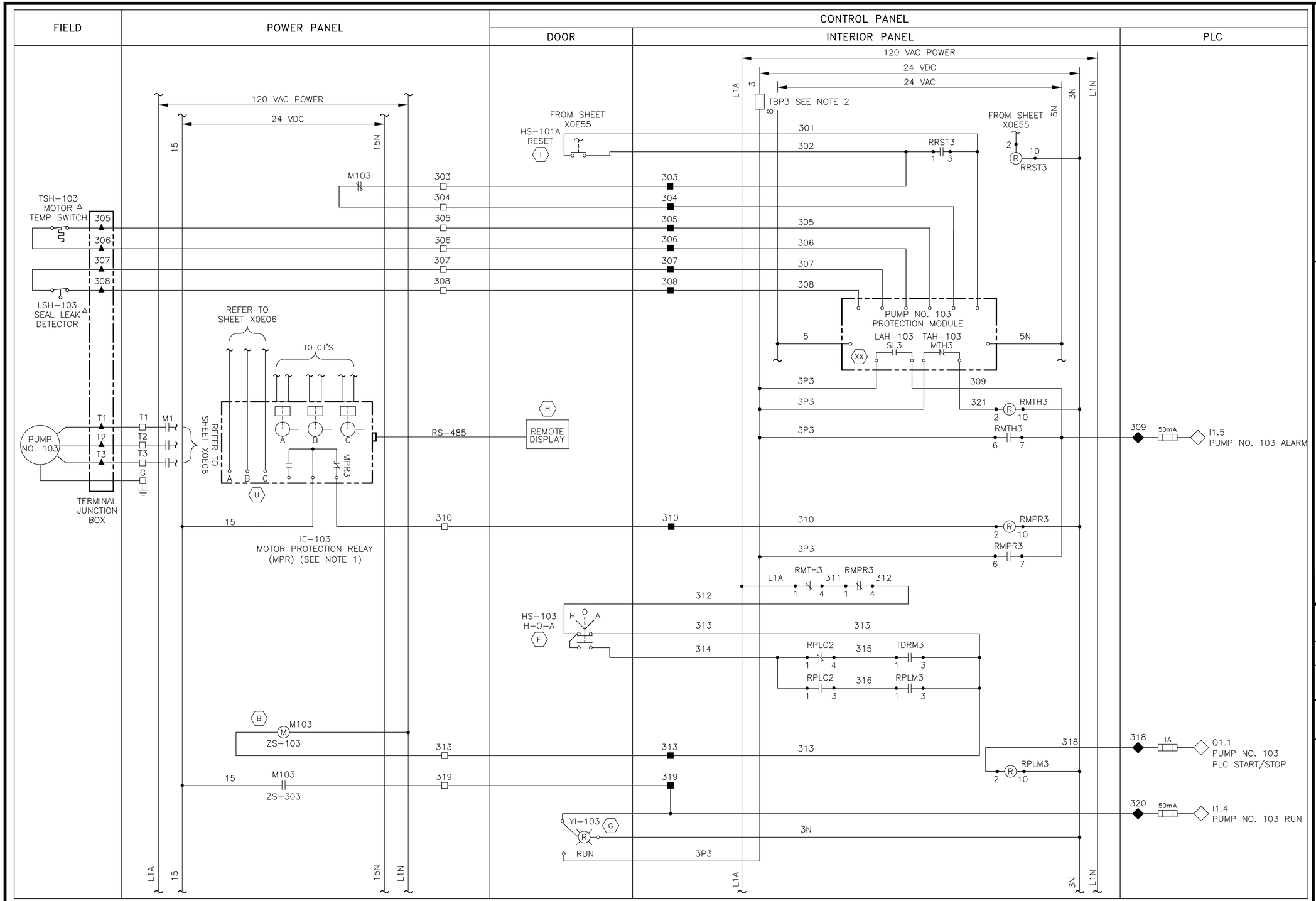

LEGEND

- △ DEVICE OR FIELD TERMINAL LOCATED AT MOTOR
- ✳ DEVICE OR FIELD TERMINAL LOCATED REMOTE
- □ DEVICE OR FIELD TERMINAL LOCATED AT MCC OR POWER PANEL
- ■ FIELD TERMINAL LOCATED AT CONTROL PANEL
- ▲ REMOTE TERMINAL
- ● DEVICE TERMINAL NO.
- ◆ PLC INTERFACE TERMINAL

NOTES TO DESIGN ENGINEER:

A. THESE LIFT STATION DRAWINGS ARE CONSIDERED TO BE DESIGN GUIDELINES FOR THE CONSTRUCTION OF CITY OF HOUSTON WASTEWATER SUBMERSIBLE LIFT STATIONS. THEIR INTENDED USE IS AS A FRAMEWORK FOR THE CONTRACTED DESIGN ENGINEER IN DEVELOPING SPECIFIC LIFT STATION DESIGNS.

IT IS THE RESPONSIBILITY OF THE CONTRACTED DESIGN ENGINEER TO VERIFY THE COMPLETENESS AND ACCURACY OF THE INFORMATION HEREIN CONTAINED AND TO ADJUST ACCORDING TO PROJECT SPECIFIC REQUIREMENTS.

B. EACH PUMP CONTROL SHALL BE INDIVIDUALLY FUSED. (24VDC, 120VAC)

C. THE DESIGN ENGINEER SHALL INCORPORATE ONLY THE NECESSARY STANDARD GUIDELINE DRAWINGS AND DETAILS INTO HIS PROJECT CONTRACT DOCUMENTATION PACKAGE, AND SHALL ADJUST PAGE NUMBERS AND CROSS REFERENCING ACCORDINGLY.

D. THE DESIGN ENGINEER SHALL CONSULT THE CITY OF HOUSTON DESIGN GUIDELINES MANUAL, THE ENGINEERING DESIGN MANUAL, AND THE MASTER SPECIFICATIONS FOR FURTHER INSTRUCTIONS AND INFORMATION PERTINENT TO THESE STANDARD DESIGN GUIDELINE DRAWINGS.

E. THE DESIGN ENGINEER SHALL REMOVE THESE NOTES, ALL REFERENCES TO THESE NOTES, AND ANY OTHER EXTRANEOUS INFORMATION FROM THE DESIGN GUIDELINE DRAWINGS. DESIGN ENGINEER SHALL PROVIDE ANY NOTES OR OTHER APPROPRIATE INFORMATION NECESSARY TO COMPLETE THE LIFT STATION DESIGN.

NOTES:

1. MOTOR PROTECTION RELAY OUTPUT CONTACT SHOWN IS NORMALLY CLOSED WHEN RELAY IS DE-ENGERGIZED, OPEN WHEN ENERGIZED, AND CLOSED WHEN IN ALARM. VERIFY OPERATION OF RELAY PROVIDED AND ADJUST CONNECTION OF RMOR AUXILIARY RELAYS.
2. FUSED TERMINAL ON TERMINAL BLOCK TB4 SEE CONTROL POWER AND COMMUNICATION WIRING DIAGRAM. DRAWING NO. X0E10.

3 PUMP OUTDOOR
PUMP 103
CONTROL WIRING DIAGRAM

PROJECT NO. R-000265-0XXX-X

TITLE CITY OF HOUSTON
DESIGN GUIDELINE DRAWINGS
FOR SUBMERSIBLE LIFT STATIONS

CITY OF HOUSTON
DEPARTMENT OF PUBLIC WORKS AND ENGINEERING
ENGINEERING AND CONSTRUCTION

DESIGN ENGINEER TO INCLUDE COH STANDARD TITLE BLOCK ON ALL DRAWINGS, SEE STANDARD TITLE BLOCK DETAIL ON SHEET Z0C0X

REV. NO.	DESCRIPTION	APP'D	DATE

SCALE: NONE
SUBMITTED:
DATE:
SURVEY BY:
FIELD BOOK NO.
DESIGNED BY:
DRAWN BY:
SHEET NO. OF SHEETS
DWG. NO. X0E56-0516

CADD DWG. FILE NO. : X0E56-0D3P.DWG

COHSTD.BDR

0 1 2 3 ORIGINAL SCALE IN INCHES FOR REDUCED PLANS

EQUIPMENT & DEVICE SCHEDULE

ITEM	QUANTITY	DESCRIPTION
A	1	PRIMARY – BACKUP PLC MODE SECTOR SWITCH
B	1	WELL LEVEL RECORDER – 4–20mA INPUT, FOXBORO DUAL CHANNEL
C	1	PUMP CONTROLLER – DIGITAL CONTROL CORP. MODEL 114360R EQUAL
D	*	NOT USED
E	3	HAND–OFF–AUTO SWITCH, 3 POSITION, HEAVY DUTY, OILTIGHT WITH 2 SETS OF CONTACT BLOCKS (PUMP CONTROL)
F	3	INDICATING LIGHT, HEAVY DUTY, OILTIGHT, RED, 24 VDC, LED, WITH "RUN" LEGEND
G	*	NOT USED
H	1	SWITCH FOR CABINET LIGHT, 120V, 20A, SPST
I	2	DUPLEX RECEPTACLE, 120V, 20A, 2 WIRE, GROUNDED, GFCI TYPE
J	1	24" LED STRIP LIGHT 120V SUITABLE FOR ZERO DEGREE OPERATION ("SEE FIXTURE B" ON Z0E01)
K	3	TIME DELAY RELAY WITH THREE FORM C CONTACTS, 24 VDC COIL AND 11 PIN SOCKET BASE
L	1	PROGRAMMABLE LOGIC CONTROLLER WITH EXPANSION UNIT
M	*	CONTROL RELAY, 24 VDC RELAY WITH THREE FORM C CONTACTS AND 11 PIN SOCKET BASE
N	*	NAMEPLATES, SEE SPECIFICATIONS (SEE NAMEPLATE SCHEDULE) (SEE NOTE 1)
O	1	NOT USED
P	1	NEMA 12 GASKETED STEEL ENCLOSURE WITHOUT VENTS 72"H x 20"D x WIDTH AS REQUIRED
Q	*	TERMINAL BLOCK
R	1	WIRE DUCT 2" WIDE X 2" DEEP MINIMUM
S	1	GROUND BUS
T	1	WIMAX ETHERNET SWITCH
U	9	CARTRIDGE FUSES AND FUSEHOLDER
V	1	PUSHBUTTON, BLACK WITH "RESET" LEGEND
W	–	NOT USED.
X	*	FUSED TERMINAL BLOCKS
Y	1	POWER SURGE PROTECTOR – CONTROL POWER
Z	1	PROGRAMMING SCREEN (HMI)
AA	*	120VAC SYSTEM FUSES
BB	1	120 VAC – 24 VDC POWER SUPPLY, 5A
CC	1	INDICATING LIGHT, HEAVY DUTY, OILTIGHT, RED, 24 VDC, LED WITH "BACKUP" LEGEND
DD	1	INDICATING LIGHT, HEAVY DUTY, OILTIGHT, GREEN, 24 VDC, LED WITH "PLC" LEGEND
EE	2	ANALOG I/O SURGE SUPPRESSOR
FF	1	FLASHER MODULE

* – AS SCHEDULED

NAMEPLATE SCHEDULE

DESIGNATION	ENGRAVED
N1	PUMP STATION DESIGNATION
N2	PUMP NO. 101
N3	PUMP NO. 102
N4	PUMP NO. 103
N8	LEVEL RECORDER
N9	PUMP CONTROLLER
N10	PROGRAMMING SCREEN
N11	CONTROL MODE
N12	PRIMARY
N13	BACKUP
N14	MOTOR DATA

HORSEPOWER (OUTPUT) _____
RPM AT FULL LOAD _____
TIME RATING _____
FREQUENCY _____
NUMBER OF PHASES _____
MODEL NUMBER _____
RATED VOLTAGE _____
SERVICE FACTOR _____
FULL LOAD AMPS _____
INSULATION CLASS _____
NEMA DESIGN LETTER _____
TEMPERATURE RISE _____
NEMA FRAME SIZE _____
DATE OF MANUFACTURE _____
THERMO PROTECTION (IF REQUIRED) _____
MOISTURE DETECTION (IF REQUIRED) _____

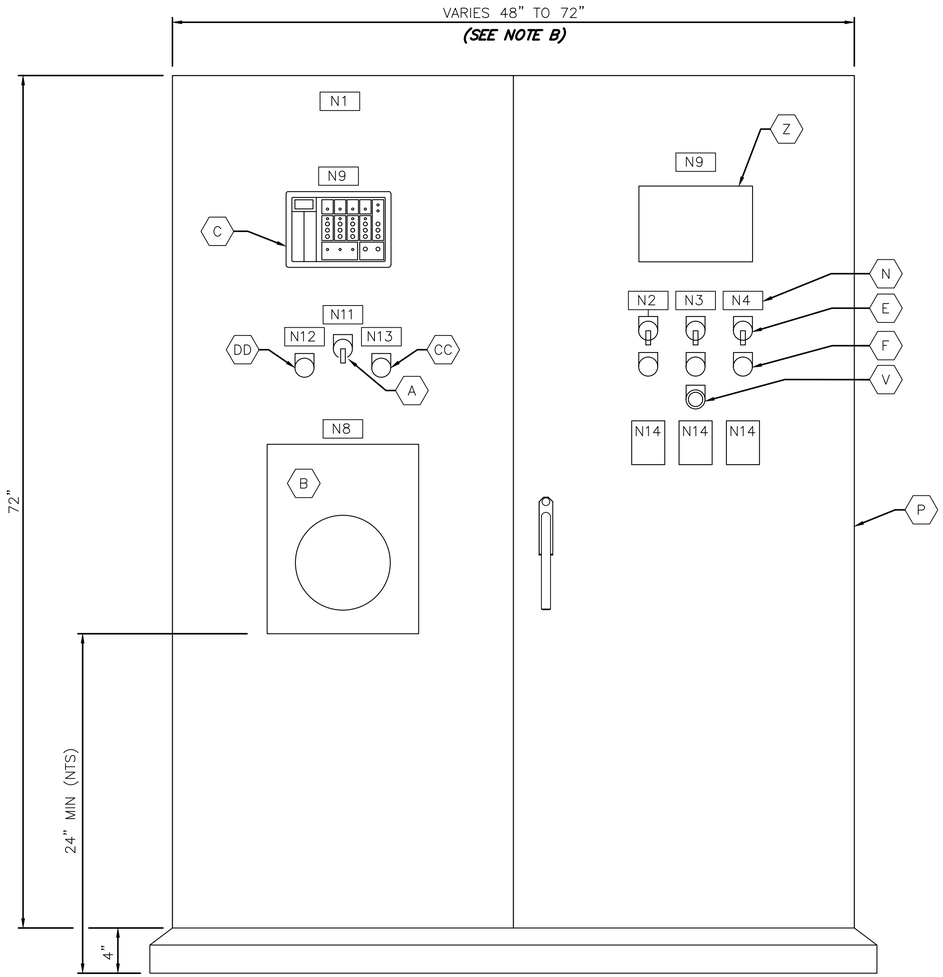

CONTROL CABINET
FRONT DOOR ELEVATION

NOTES TO DESIGN ENGINEER:

A. THESE LIFT STATION DRAWINGS ARE CONSIDERED TO BE DESIGN GUIDELINES FOR THE CONSTRUCTION OF CITY OF HOUSTON WASTEWATER SUBMERSIBLE LIFT STATIONS. THEIR INTENDED USE IS AS A FRAMEWORK FOR THE CONTRACTED DESIGN ENGINEER IN DEVELOPING SPECIFIC LIFT STATION DESIGNS.

IT IS THE RESPONSIBILITY OF THE CONTRACTED DESIGN ENGINEER TO VERIFY THE COMPLETENESS AND ACCURACY OF THE INFORMATION HEREIN CONTAINED AND TO ADJUST ACCORDING TO PROJECT SPECIFIC REQUIREMENTS.

B. DESIGN ENGINEER SHALL SELECT THE APPROPRIATE CONTROL PANEL WIDTH (SEE DEVICE RATINGS SCHEDULE ON SHEET Z0E42).

C. THE DESIGN ENGINEER SHALL INCORPORATE ONLY THE NECESSARY STANDARD GUIDELINE DRAWINGS AND DETAILS INTO HIS PROJECT CONTRACT DOCUMENTATION PACKAGE, AND SHALL ADJUST PAGE NUMBERS AND CROSS REFERENCING ACCORDINGLY.

D. THE DESIGN ENGINEER SHALL CONSULT THE CITY OF HOUSTON DESIGN GUIDELINES MANUAL, THE ENGINEERING DESIGN MANUAL, AND THE MASTER SPECIFICATIONS FOR FURTHER INSTRUCTIONS AND INFORMATION PERTINENT TO THESE STANDARD DESIGN GUIDELINE DRAWINGS.

E. THE DESIGN ENGINEER SHALL REMOVE THESE NOTES, ALL REFERENCES TO THESE NOTES, AND ANY OTHER EXTRANEOUS INFORMATION FROM THE DESIGN GUIDELINE DRAWINGS. DESIGN ENGINEER SHALL PROVIDE ANY NOTES OR OTHER APPROPRIATE INFORMATION NECESSARY TO COMPLETE THE LIFT STATION DESIGN.

NOTES:

1. NAMEPLATES SHALL BE MOUNTED TO PANELS USING STAINLESS STEEL HARDWARE.

3 PUMP INDOOR
CONTROL CABINET
EQUIPMENT LAYOUT & SCHEDULE

PROJECT NO. R-000265-0XXX-X

TITLE CITY OF HOUSTON
DESIGN GUIDELINE DRAWINGS
FOR SUBMERSIBLE LIFT STATIONS

CITY OF HOUSTON
DEPARTMENT OF PUBLIC WORKS AND ENGINEERING
ENGINEERING AND CONSTRUCTION

DESIGN ENGINEER TO INCLUDE COH STANDARD TITLE BLOCK ON ALL DRAWINGS, SEE STANDARD TITLE BLOCK DETAIL ON SHEET Z0C0X

REV. NO.	DESCRIPTION	APP'D	DATE

SCALE: NONE
DESIGNED BY:
DRAWN BY:
SUBMITTED:
DATE:
SURVEY BY:
FIELD BOOK NO.
SHEET NO. OF SHEETS
DWG. NO. Y0E21-0516

CADD DWG. FILE NO. : Y0E21-ID3P.DWG

COHSTD.BDR

0 1 2 3 ORIGINAL SCALE IN INCHES FOR REDUCED PLANS

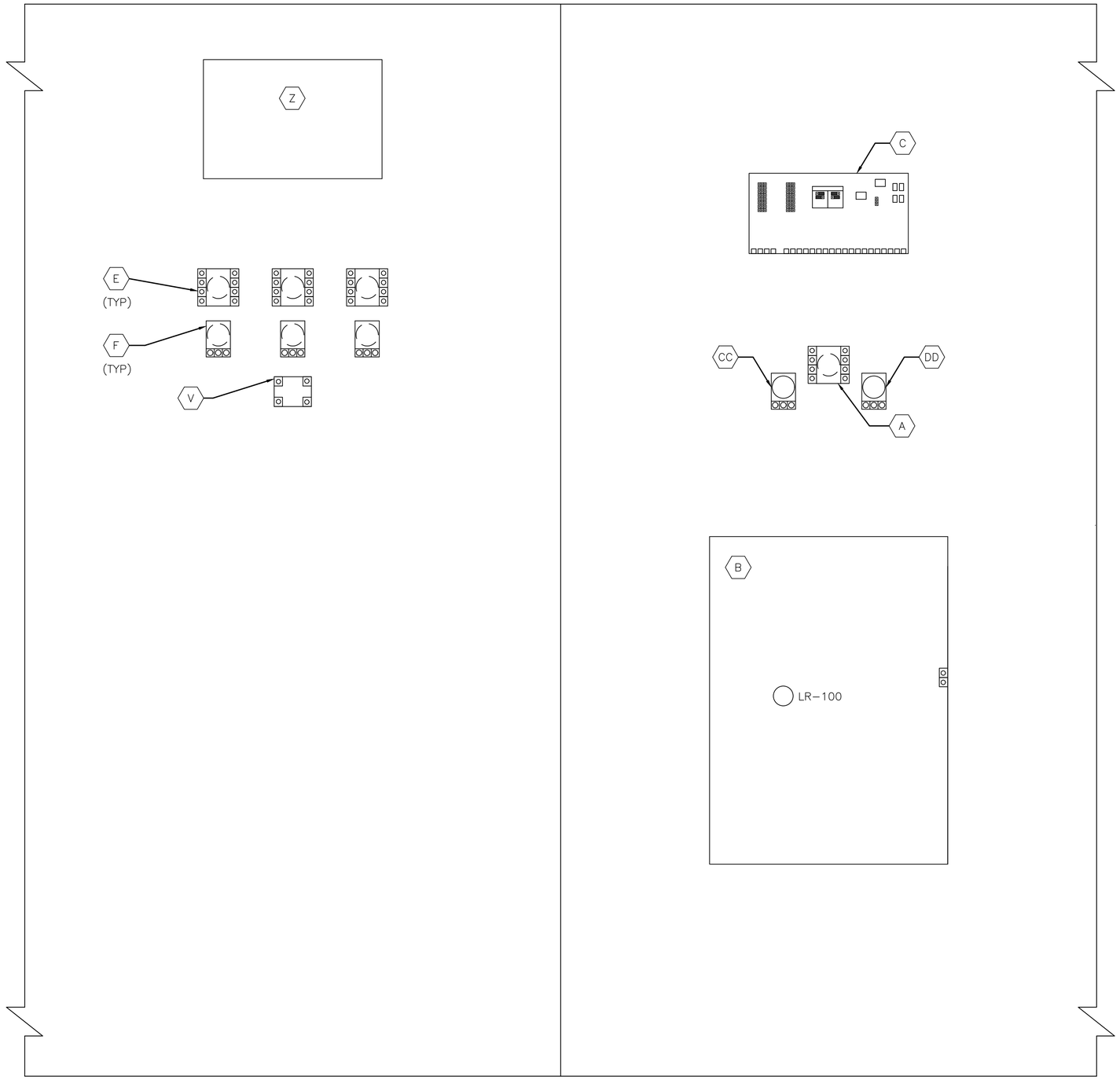

CONTROL CABINET

BACK DOOR ELEVATION

NOTES TO DESIGN ENGINEER:

A. THESE LIFT STATION DRAWINGS ARE CONSIDERED TO BE DESIGN GUIDELINES FOR THE CONSTRUCTION OF CITY OF HOUSTON WASTEWATER SUBMERSIBLE LIFT STATIONS. THEIR INTENDED USE IS AS A FRAMEWORK FOR THE CONTRACTED DESIGN ENGINEER IN DEVELOPING SPECIFIC LIFT STATION DESIGNS.

IT IS THE RESPONSIBILITY OF THE CONTRACTED DESIGN ENGINEER TO VERIFY THE COMPLETENESS AND ACCURACY OF THE INFORMATION HEREIN CONTAINED AND TO ADJUST ACCORDING TO PROJECT SPECIFIC REQUIREMENTS.

B. DESIGN ENGINEER SHALL SELECT THE APPROPRIATE CONTROL PANEL WIDTH (SEE DEVICE RATINGS SCHEDULE ON SHEET ZOE42).

C. THE DESIGN ENGINEER SHALL INCORPORATE ONLY THE NECESSARY STANDARD GUIDELINE DRAWINGS AND DETAILS INTO HIS PROJECT CONTRACT DOCUMENTATION PACKAGE, AND SHALL ADJUST PAGE NUMBERS AND CROSS REFERENCING ACCORDINGLY.

D. THE DESIGN ENGINEER SHALL CONSULT THE CITY OF HOUSTON DESIGN GUIDELINES MANUAL, THE ENGINEERING DESIGN MANUAL, AND THE MASTER SPECIFICATIONS FOR FURTHER INSTRUCTIONS AND INFORMATION PERTINENT TO THESE STANDARD DESIGN GUIDELINE DRAWINGS.

E. THE DESIGN ENGINEER SHALL REMOVE THESE NOTES, ALL REFERENCES TO THESE NOTES, AND ANY OTHER EXTRANEOUS INFORMATION FROM THE DESIGN GUIDELINE DRAWINGS. DESIGN ENGINEER SHALL PROVIDE ANY NOTES OR OTHER APPROPRIATE INFORMATION NECESSARY TO COMPLETE THE LIFT STATION DESIGN.

NOTES:

1. SEE SHEET YOE21 FOR EQUIPMENT SCHEDULE.

3 PUMP INDOOR
CONTROL CABINET
BACK DOOR ELEVATION

PROJECT NO.
R-000265-0XXX-X

TITLE
CITY OF HOUSTON
DESIGN GUIDELINE DRAWINGS
FOR SUBMERSIBLE LIFT STATIONS

CITY OF HOUSTON
DEPARTMENT OF PUBLIC WORKS AND ENGINEERING
ENGINEERING AND CONSTRUCTION

DESIGN ENGINEER TO INCLUDE COH STANDARD TITLE BLOCK ON ALL DRAWINGS, SEE STANDARD TITLE BLOCK DETAIL ON SHEET ZOCOX

REV. NO.	DESCRIPTION	APP'D	DATE

SCALE: NONE
SUBMITTED:
DATE:
SURVEY BY:
FIELD BOOK NO.
DESIGNED BY:
DRAWN BY:
SHEET NO. OF SHEETS
DWG. NO.
YOE22-0516

CADD DWG. FILE NO. :
YOE22-ID3P.DWG

COHSTD.BDR

0 1 2 3 ORIGINAL SCALE IN INCHES FOR REDUCED PLANS

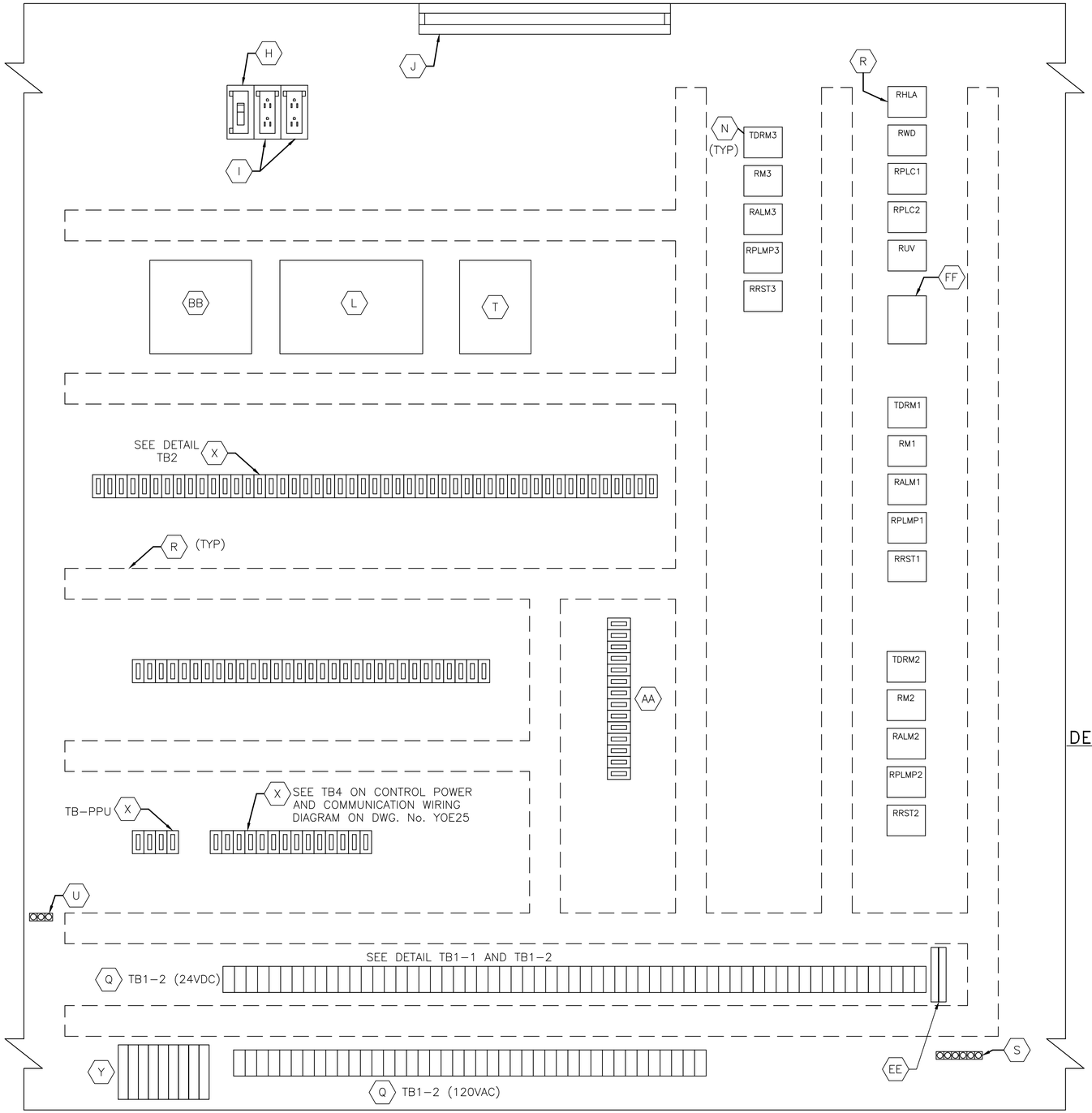

CONTROL PANEL ELEVATION

L1A
L1N
48
48N
SPARE
109
110
X1-1
111
X2-1
SPARE
209
210
X1-2
211
X2-2
SPARE
309
310
X1-3
311
X2-3
SPARE
49
50
51
52
53
54
L
N
1
24V-
24V-
2
27
28
31
32
34
38

DETAIL TB1-1

SPARE
11
1001
1001A
12
1003
1003A
102
103
3P1
109
110
112
116
117
124
125
126
127
SPARE
202
203
3P2
209
210
212
216
217
224
225
226
227
SPARE
302
303
3P3
309
310
312
316
317
324
325
326
327
SPARE

DETAIL TB1-2

3
3N
13
13A
13G
14
14A
14G
27
28
29
30
33
35
37
38
41
45
47
50
52
54
100
108
113
117
118
119
SPARE
200
208
213
217
218
219
SPARE
300
308
313
317
318
319
SPARE

DETAIL TB2

LEGEND	
TAG	DESCRIPTION
RALM	PUMP ALARM RELAY
RHLA	HIGH LEVEL RELAY ALARM
RPLMP	BACKUP SYSTEM RUN RELAY
RRST	PUMP RESET AUX RELAY
RPLC	PLC MODE AUX RELAY
RM	PUMP RUN AUX RELAY
RWD	WATCHDOG RELAY
RUV	UNDER VOLTAGE RELAY

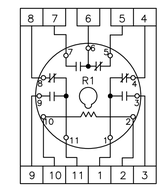

RELAY DETAIL
ITEM K & M

NOTES TO DESIGN ENGINEER:

A. THESE LIFT STATION DRAWINGS ARE CONSIDERED TO BE DESIGN GUIDELINES FOR THE CONSTRUCTION OF CITY OF HOUSTON WASTEWATER SUBMERSIBLE LIFT STATIONS. THEIR INTENDED USE IS AS A FRAMEWORK FOR THE CONTRACTED DESIGN ENGINEER IN DEVELOPING SPECIFIC LIFT STATION DESIGNS.

IT IS THE RESPONSIBILITY OF THE CONTRACTED DESIGN ENGINEER TO VERIFY THE COMPLETENESS AND ACCURACY OF THE INFORMATION HEREIN CONTAINED AND TO ADJUST ACCORDING TO PROJECT SPECIFIC REQUIREMENTS.

B. THE DESIGN ENGINEER SHALL INCORPORATE ONLY THE NECESSARY STANDARD GUIDELINE DRAWINGS AND DETAILS INTO HIS PROJECT CONTRACT DOCUMENTATION PACKAGE, AND SHALL ADJUST PAGE NUMBERS AND CROSS REFERENCING ACCORDINGLY.

C. THE DESIGN ENGINEER SHALL CONSULT THE CITY OF HOUSTON DESIGN GUIDELINES MANUAL, THE ENGINEERING DESIGN MANUAL, AND THE MASTER SPECIFICATIONS FOR FURTHER INSTRUCTIONS AND INFORMATION PERTINENT TO THESE STANDARD DESIGN GUIDELINE DRAWINGS.

D. THE DESIGN ENGINEER SHALL REMOVE THESE NOTES, ALL REFERENCES TO THESE NOTES, AND ANY OTHER EXTRANEOUS INFORMATION FROM THE DESIGN GUIDELINE DRAWINGS. DESIGN ENGINEER SHALL PROVIDE ANY NOTES OR OTHER APPROPRIATE INFORMATION NECESSARY TO COMPLETE THE LIFT STATION DESIGN.

NOTES:
1. SEE SHEET YOE21 FOR EQUIPMENT SCHEDULE.

3 PUMP INDOOR
CONTROL CABINET
EQUIPMENT LAYOUT

PROJECT NO. R-000265-0XXX-X

TITLE CITY OF HOUSTON
DESIGN GUIDELINE DRAWINGS
FOR SUBMERSIBLE LIFT STATIONS

CITY OF HOUSTON
DEPARTMENT OF PUBLIC WORKS AND ENGINEERING
ENGINEERING AND CONSTRUCTION

DESIGN ENGINEER TO INCLUDE COH STANDARD TITLE BLOCK ON ALL DRAWINGS, SEE STANDARD TITLE BLOCK DETAIL ON SHEET ZOC0X

REV. NO.	DESCRIPTION	APP'D	DATE

SCALE: NONE
SUBMITTED:
DATE:
SURVEY BY:
FIELD BOOK NO.
DESIGNED BY:
DRAWN BY:
SHEET NO. OF SHEETS
DWG. NO. YOE23-0516

CADD DWG. FILE NO. : YOE23-ID3P.DWG

COHSTD.BDR

0 1 2 3 ORIGINAL SCALE IN INCHES FOR REDUCED PLANS

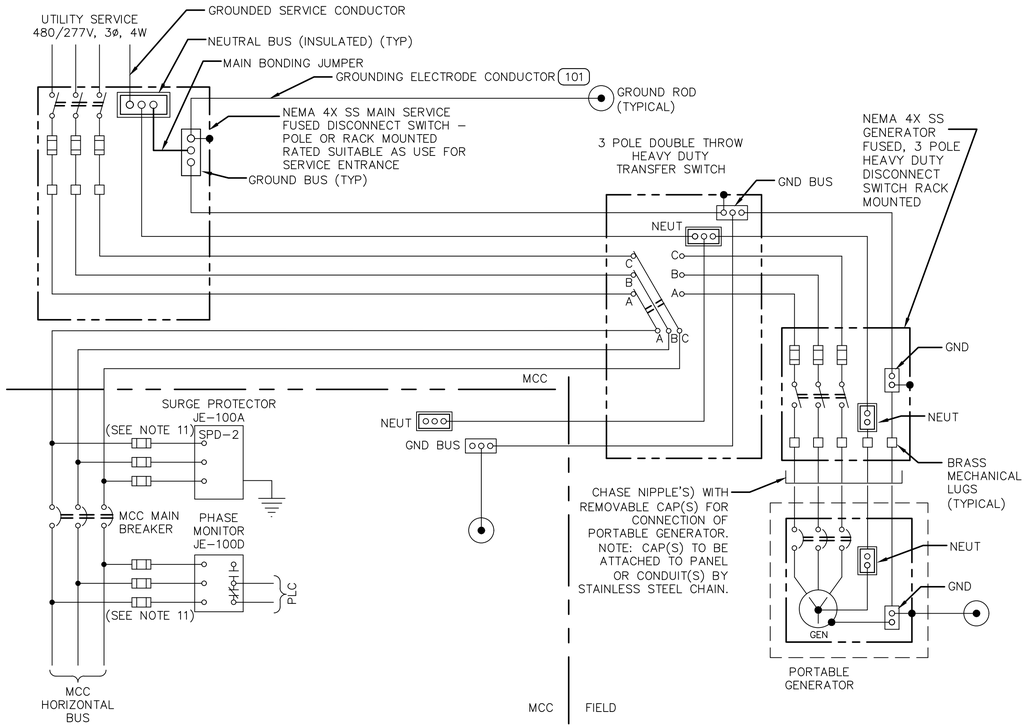

POWER WIRING DIAGRAM (SEE NOTE 7)

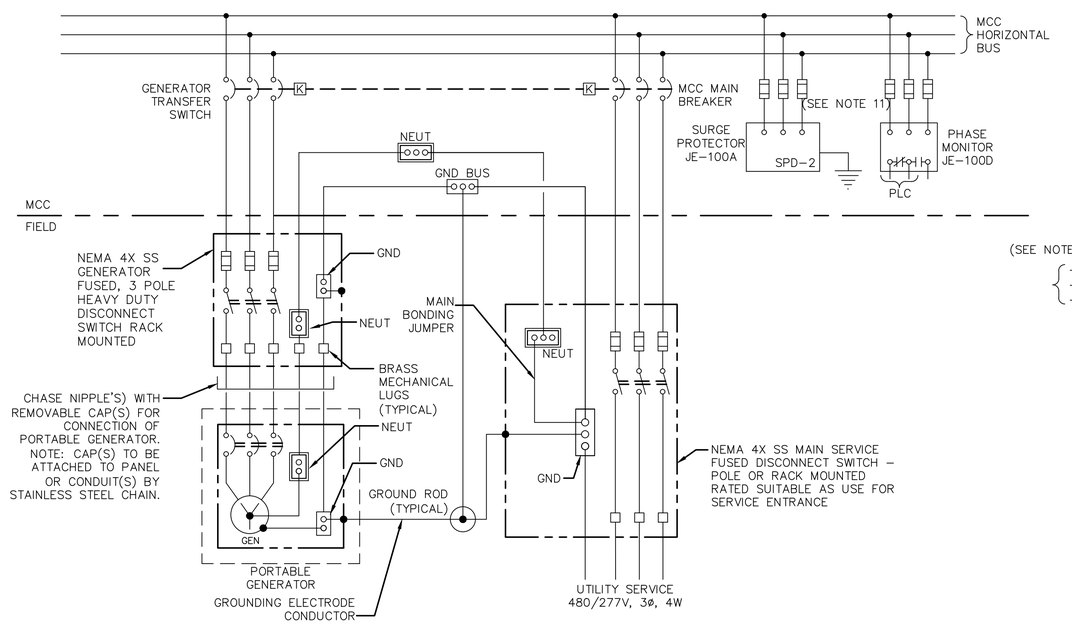

POWER WIRING DIAGRAM (SEE NOTE 8)

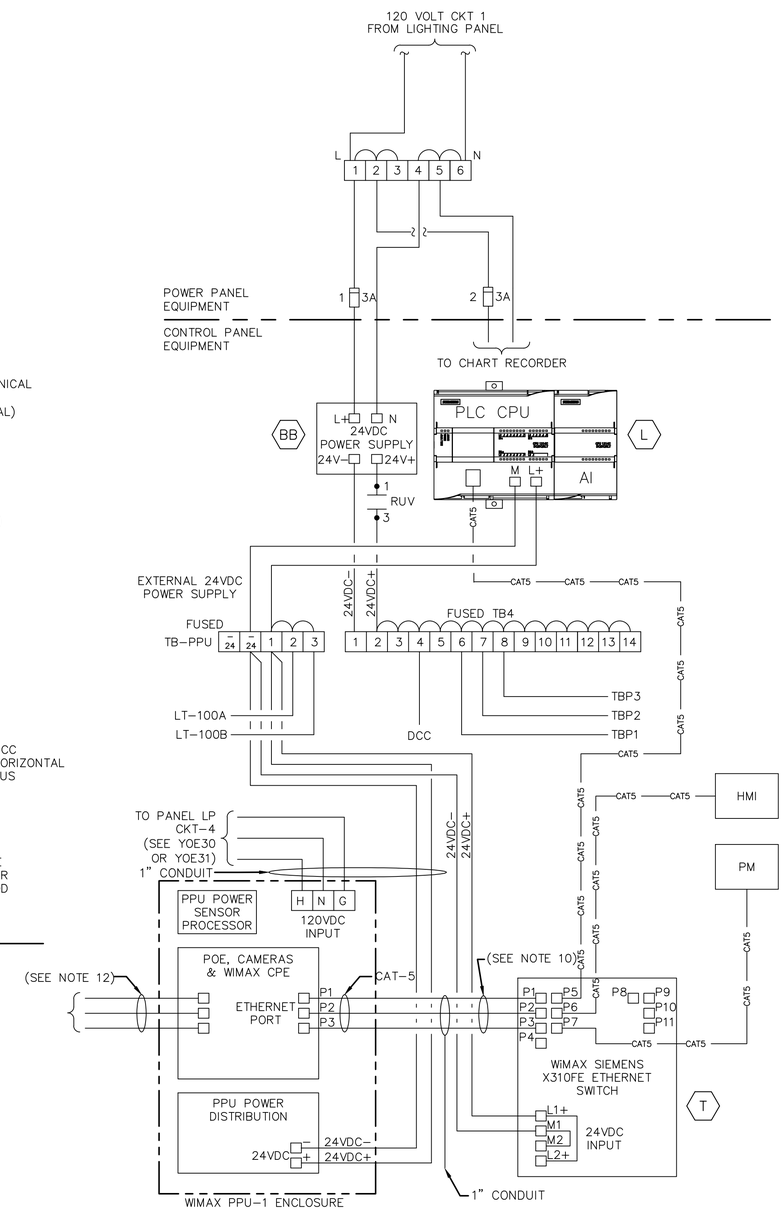

CONTROL POWER & COMMUNICATIONS WIRING DIAGRAM

(SEE NOTE 9)

NOTES TO DESIGN ENGINEER:

A. THESE LIFT STATION DRAWINGS ARE CONSIDERED TO BE DESIGN GUIDELINES FOR THE CONSTRUCTION OF CITY OF HOUSTON WASTEWATER SUBMERSIBLE LIFT STATIONS. THEIR INTENDED USE IS AS A FRAMEWORK FOR THE CONTRACTED DESIGN ENGINEER IN DEVELOPING SPECIFIC LIFT STATION DESIGNS.

IT IS THE RESPONSIBILITY OF THE CONTRACTED DESIGN ENGINEER TO VERIFY THE COMPLETENESS AND ACCURACY OF THE INFORMATION HEREIN CONTAINED AND TO ADJUST ACCORDING TO PROJECT SPECIFIC REQUIREMENTS.

B. UNLESS OTHERWISE INDICATED, ALL DEVICES WITHOUT FURTHER DESIGNATION ARE LOCATED AT THE MOTOR CONTROL CENTER (MCC).

C. THE DESIGN ENGINEER SHALL INCORPORATE ONLY THE NECESSARY STANDARD GUIDELINE DRAWINGS AND DETAILS INTO HIS PROJECT CONTRACT DOCUMENTATION PACKAGE, AND SHALL ADJUST PAGE NUMBERS AND CROSS REFERENCING ACCORDINGLY.

D. THE DESIGN ENGINEER SHALL CONSULT THE CITY OF HOUSTON DESIGN GUIDELINES MANUAL, THE ENGINEERING DESIGN MANUAL, AND THE MASTER SPECIFICATIONS FOR FURTHER INSTRUCTIONS AND INFORMATION PERTINENT TO THESE STANDARD DESIGN GUIDELINE DRAWINGS.

E. THE DESIGN ENGINEER SHALL REMOVE THESE NOTES, ALL REFERENCES TO THESE NOTES, AND ANY OTHER EXTRANEOUS INFORMATION FROM THE DESIGN GUIDELINE DRAWINGS. DESIGN ENGINEER SHALL PROVIDE ANY NOTES OR OTHER APPROPRIATE INFORMATION NECESSARY TO COMPLETE THE LIFT STATION DESIGN.

NOTES:

1. THE 'X' NOTATION IN SCHEMATIC DESIGNATIONS REPRESENTS APPLICABLE PUMP NO. 101, 102, 103.
2. THE 'Y' NOTATION INDICATES MCC CIRCUIT NUMBER.
3. UNLESS OTHERWISE INDICATED, ALL DEVICES WITHOUT FURTHER DESIGNATION ARE LOCATED AT THE MOTOR CONTROL CENTER (MCC).
4. REFER TO SPEC SECTION 16120 FOR CONDUCTOR COLOR CODE.
5. THE POWER SUPPLY SHALL FEED THE 24VDC I/O.
6. NOT USED.
7. REFER TO YOE30.
8. REFER TO YOE31.
9. WIMAX PPU-1 & SCADA WILL BE PROVIDED BY CONTRACTOR TO RUN CONDUITS & WIRES.
10. THREE ETHERNET CABLES FOR RADIO (P3), CAMERA 1 (P1), CAMERA 2 (P2).
11. PROVIDE FUSE SIZE ACCORDING TO MANUFACTURER'S REQUIREMENTS.
12. POE CABLES TO RADIO AND CAMERAS.

3 PUMP INDOOR
MCC INCOMING POWER SCHEMATIC & CONTROL POWER & COMMUNICATIONS WIRING DIAGRAM

PROJECT NO. R-000265-0XXX-X

TITLE CITY OF HOUSTON DESIGN GUIDELINE DRAWINGS FOR SUBMERSIBLE LIFT STATIONS

CITY OF HOUSTON
DEPARTMENT OF PUBLIC WORKS AND ENGINEERING
ENGINEERING AND CONSTRUCTION

DESIGN ENGINEER TO INCLUDE COH STANDARD TITLE BLOCK ON ALL DRAWINGS, SEE STANDARD TITLE BLOCK DETAIL ON SHEET ZOCOX

REV. NO.	DESCRIPTION	APP'D	DATE

SCALE: NONE
SUBMITTED:
DATE:
SURVEY BY:
FIELD BOOK NO.
DESIGNED BY:
DRAWN BY:
SHEET NO. OF SHEETS
DWG. NO. Y0E25-0516

CADD DWG. FILE NO. : Y0E25-ID3P.DWG

COHSTD.BDR

0 1 2 3 ORIGINAL SCALE IN INCHES FOR REDUCED PLANS

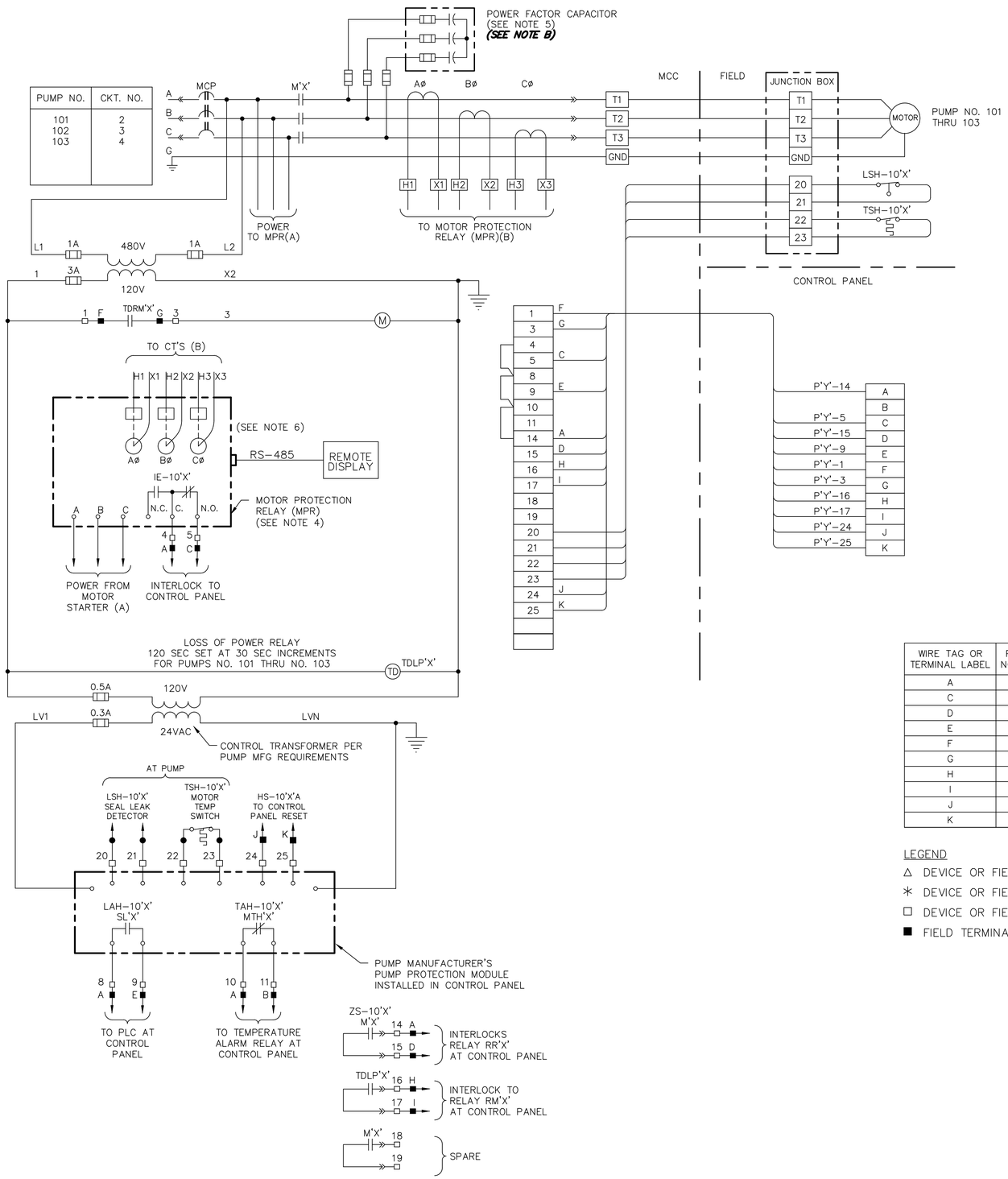

WIRE TAG OR TERMINAL LABEL	PUMP NO. 101	PUMP NO. 102	PUMP NO. 103	FUNCTION
A	3P1	3P2	3P3	24VDC CONTROL
C	116	216	316	PUMP ALARM
D	112	212	312	M CONTACT
E	117	217	317	SEAL LEAK
F	109	209	309	RUN INTERLOCK
G	110	210	310	RUN INTERLOCK
H	102	202	302	LOSS OF POWER TIMER
I	103	203	303	LOSS OF POWER TIMER
J	124	224	324	RESET
K	125	225	325	RESET

LEGEND

△ DEVICE OR FIELD TERMINAL LOCATED AT MOTOR
∗ DEVICE OR FIELD TERMINAL LOCATED REMOTE
□ DEVICE OR FIELD TERMINAL LOCATED AT MCC
■ FIELD TERMINAL LOCATED AT CONTROL PANEL
▲ REMOTE TERMINAL
● DEVICE TERMINAL NO.
◆ PLC INTERFACE TERMINAL

MCC POWER SCHEMATIC

NOTES TO DESIGN ENGINEER:

A. THESE LIFT STATION DRAWINGS ARE CONSIDERED TO BE DESIGN GUIDELINES FOR THE CONSTRUCTION OF CITY OF HOUSTON WASTEWATER SUBMERSIBLE LIFT STATIONS. THEIR INTENDED USE IS AS A FRAMEWORK FOR THE CONTRACTED DESIGN ENGINEER IN DEVELOPING SPECIFIC LIFT STATION DESIGNS.

IT IS THE RESPONSIBILITY OF THE CONTRACTED DESIGN ENGINEER TO VERIFY THE COMPLETENESS AND ACCURACY OF THE INFORMATION HEREIN CONTAINED AND TO ADJUST ACCORDING TO PROJECT SPECIFIC REQUIREMENTS.

B. POWER FACTOR CORRECTION CAPACITOR IS REQUIRED FOR EACH PUMP RATED AT 20 HP OR GREATER. MOUNT CAPACITORS EXTERNAL TO MCC WITHIN THE CONTROL BUILDING.

C. THE DESIGN ENGINEER SHALL INCORPORATE ONLY THE NECESSARY STANDARD GUIDELINE DRAWINGS AND DETAILS INTO HIS PROJECT CONTRACT DOCUMENTATION PACKAGE, AND SHALL ADJUST PAGE NUMBERS AND CROSS REFERENCING ACCORDINGLY.

D. THE DESIGN ENGINEER SHALL CONSULT THE CITY OF HOUSTON DESIGN GUIDELINES MANUAL, THE ENGINEERING DESIGN MANUAL, AND THE MASTER SPECIFICATIONS FOR FURTHER INSTRUCTIONS AND INFORMATION PERTINENT TO THESE STANDARD DESIGN GUIDELINE DRAWINGS.

E. THE DESIGN ENGINEER SHALL REMOVE THESE NOTES, ALL REFERENCES TO THESE NOTES, AND ANY OTHER EXTRANEOUS INFORMATION FROM THE DESIGN GUIDELINE DRAWINGS. DESIGN ENGINEER SHALL PROVIDE ANY NOTES OR OTHER APPROPRIATE INFORMATION NECESSARY TO COMPLETE THE LIFT

NOTES:

1. THE 'X' NOTATION IN SCHEMATIC DESIGNATIONS REPRESENTS APPLICABLE PUMP NO. 101, 102, OR 103.
2. THE 'Y' NOTATION INDICATES MCC CIRCUIT NUMBER.
3. UNLESS OTHERWISE INDICATED, ALL DEVICES WITHOUT FURTHER DESIGNATION ARE LOCATED AT THE MOTOR CONTROL CENTER (MCC).
4. MOTOR PROTECTION RELAY OUTPUT CONTACT SHOWN IS NORMALLY CLOSED WHEN RELAY IS DE-ENERGIZED, OPEN WHEN ENERGIZED, AND CLOSED WHEN IN ALARM. (VERIFY OPERATION OF RELAY PROVIDED AND ADJUST CONNECTION OF RMOR AUXILIARY RELAYS.)
5. CONTRACTOR TO COORDINATE POWER FACTOR CORRECTION CAPACITOR SIZE WITH PUMP MANUFACTURER.
6. PROVIDE CT SIZING AND TERMINATIONS PER MANUFACTURER'S REQUIREMENTS.

3 PUMP INDOOR
MCC POWER SCHEMATIC & CONTROL
POWER & COMMUNICATIONS WIRING DIAGRAM

PROJECT NO.
R-000265-0XXX-X

TITLE
CITY OF HOUSTON
DESIGN GUIDELINE DRAWINGS
FOR SUBMERSIBLE LIFT STATIONS

CITY OF HOUSTON
DEPARTMENT OF PUBLIC WORKS AND ENGINEERING
ENGINEERING AND CONSTRUCTION

DESIGN ENGINEER TO INCLUDE COH STANDARD TITLE BLOCK ON ALL DRAWINGS, SEE STANDARD TITLE BLOCK DETAIL ON SHEET Z0C0X

REV. NO.	DESCRIPTION	APP'D	DATE

SCALE: NONE
DESIGNED BY:
DRAWN BY:
SUBMITTED:
DATE:
SURVEY BY:
FIELD BOOK NO.
SHEET NO. OF SHEETS
DWG. NO.
Y0E26-0516

CADD DWG. FILE NO. :
Y0E26-ID3P.DWG

COHSTD.BDR

0 1 2 3 ORIGINAL SCALE IN INCHES FOR REDUCED PLANS

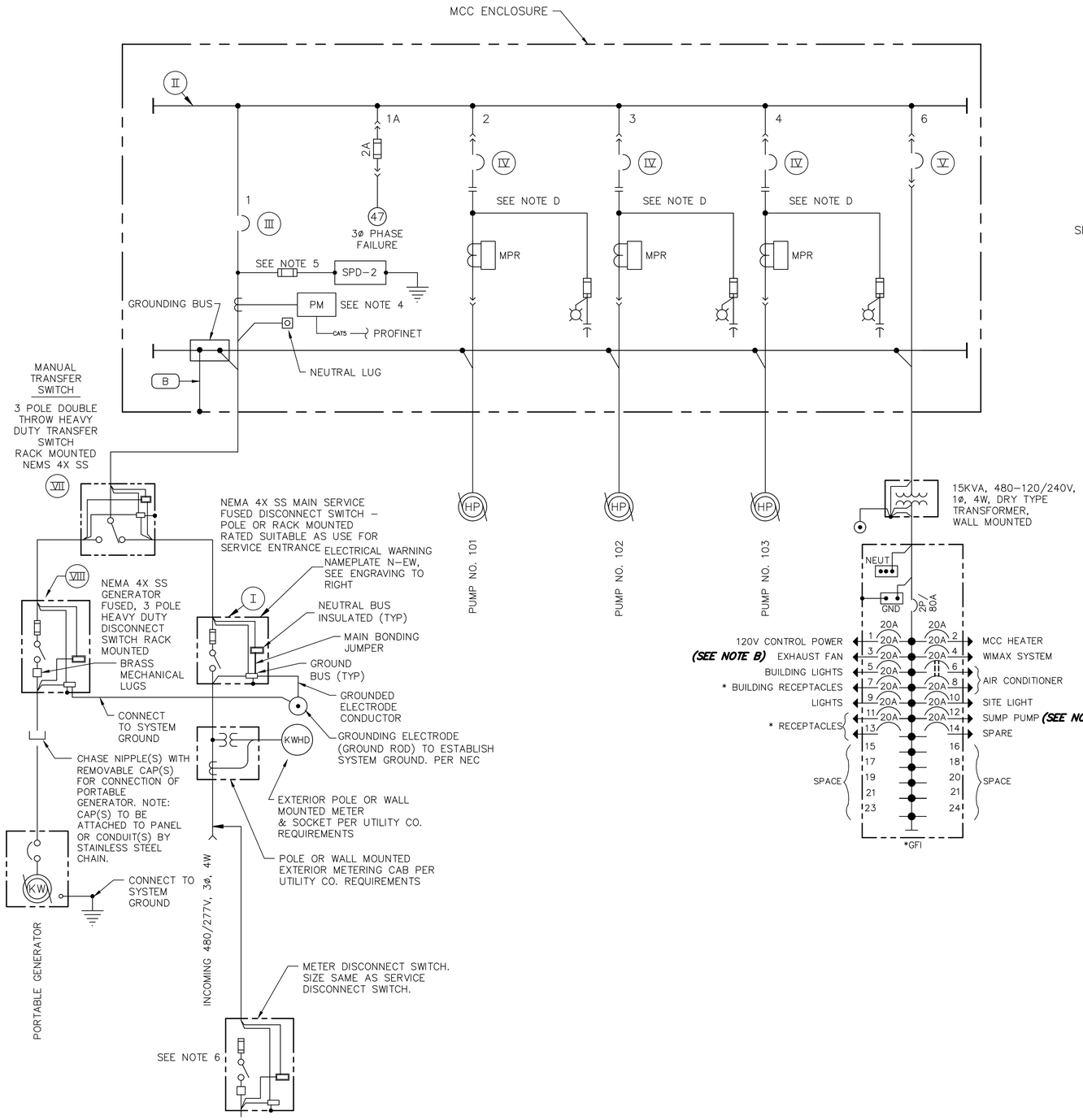

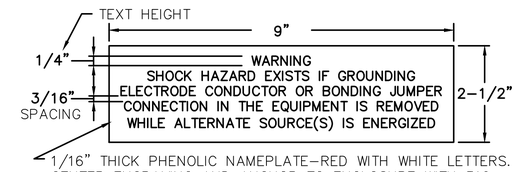

1/16" THICK PHENOLIC NAMEPLATE–RED WITH WHITE LETTERS. CENTER ENGRAVING AND ANCHOR TO ENCLOSURE WITH 316 SS SELF TAPPING SCREWS. APPLY SILICON SEALER INSIDE DOOR AT SCREW PENETRATION TO SEAL SCREWS.

ELECTRICAL WARNING NAMEPLATE N–EW ENGRAVING

LOAD CALCULATION		
ITEM	HP	FLI*
PUMP NO. 101	__ HP	__A
PUMP NO. 102	__ HP	__A
PUMP NO. 103	__ HP	__A
15 KVA TRANSFORMER	__	__A
SUBTOTAL		__A
25% OF LARGEST MOTOR LOAD		__A
MINIMUM AMPACITY		__A

* BASED ON SELECTED PUMP MFG DATA

NOTES TO DESIGN ENGINEER:

A. THESE LIFT STATION DRAWINGS ARE CONSIDERED TO BE DESIGN GUIDELINES FOR THE CONSTRUCTION OF CITY OF HOUSTON WASTEWATER SUBMERSIBLE LIFT STATIONS. THEIR INTENDED USE IS AS A FRAMEWORK FOR THE CONTRACTED DESIGN ENGINEER IN DEVELOPING SPECIFIC LIFT STATION DESIGNS.

IT IS THE RESPONSIBILITY OF THE CONTRACTED DESIGN ENGINEER TO VERIFY THE COMPLETENESS AND ACCURACY OF THE INFORMATION HEREIN CONTAINED AND TO ADJUST ACCORDING TO PROJECT SPECIFIC REQUIREMENTS.

B. PROVIDE NOTED ITEMS FOR STATIONS WITH VALVE VAULT DESIGNATED AS ALTERNATE LOW PROFILE, CONFIGURATION, ONLY. PROVIDE VALVE VAULT SUMP PUMP AND EXHAUST FAN FOR CLOSED TOP VALVE VAULTS ONLY (CONCRETE TOP SLAB WITH HATCHES). DELETE THESE ITEMS FOR VALVE VAULTS WITH OPEN GRATING TOPS.

C. FOR DESCRIPTION AND RATINGS OF ITEMS INDICATED ROMAN NUMERAL FLAGS, SEE DEVICE RATINGS SCHEDULES.

D. POWER FACTOR CORRECTION CAPACITOR IS REQUIRED FOR EACH PUMP RATED AT 20 HP OR GREATER. MOUNT CAPACITORS EXTERNAL TO MCC WITHIN THE CONTROL BUILDING.

E. PROVIDE SEPARATE 120/24 VAC CONTROL TRANSFORMER FOR PUMP PROTECTION MODULE POWER.

F. THE DESIGN ENGINEER SHALL INCORPORATE ONLY THE NECESSARY STANDARD GUIDELINE DRAWINGS AND DETAILS INTO HIS PROJECT CONTRACT DOCUMENTATION PACKAGE, AND SHALL ADJUST PAGE NUMBERS AND CROSS REFERENCING ACCORDINGLY.

G. THE DESIGN ENGINEER SHALL CONSULT THE CITY OF HOUSTON DESIGN GUIDELINES MANUAL, THE ENGINEERING DESIGN MANUAL, AND THE MASTER SPECIFICATIONS FOR FURTHER INSTRUCTIONS AND INFORMATION PERTINENT TO THESE STANDARD DESIGN GUIDELINE DRAWINGS.

H. THE DESIGN ENGINEER SHALL REMOVE THESE NOTES, ALL REFERENCES TO THESE NOTES, AND ANY OTHER EXTRANEOUS INFORMATION FROM THE DESIGN GUIDELINE DRAWINGS. DESIGN ENGINEER SHALL PROVIDE ANY NOTES OR OTHER APPROPRIATE INFORMATION NECESSARY TO COMPLETE THE LIFT STATION DESIGN.

NOTES:

1. FOR DESCRIPTION AND RATINGS OF ITEMS INDICATED WITH ROMAN NUMERAL FLAGS, SEE DEVICE RATINGS SCHEDULE.
2. CONTRACTOR TO COORDINATE POWER FACTOR CORRECTION CAPACITOR SIZE WITH PUMP MANUFACTURER. MINIMUM 95% POWER FACTOR CORRECTION AT FULL LOAD.
3. CONTRACTOR SHALL VERIFY ACTUAL AMPERAGES OF MOTORS AND SIZE STARTERS, MOTOR CIRCUIT PROTECTORS, ETC. ACCORDINGLY.
4. POWER MONITOR SEE SPECS. 13446.
5. PROVIDE FUSE SIZE ACCORDING TO MANUFACTURER'S REQUIREMENTS.
6. WHERE USED 320 SERIES METER, USE 400A AND BELOW DISCONNECT.

3 PUMP INDOOR
SINGLE LINE DIAGRAM

PROJECT NO.
R-000265-0XXX-X

TITLE
CITY OF HOUSTON
DESIGN GUIDELINE DRAWINGS
FOR SUBMERSIBLE LIFT STATIONS

CITY OF HOUSTON
DEPARTMENT OF PUBLIC WORKS AND ENGINEERING
ENGINEERING AND CONSTRUCTION

DESIGN ENGINEER TO INCLUDE COH STANDARD TITLE BLOCK ON ALL DRAWINGS, SEE STANDARD TITLE BLOCK DETAIL ON SHEET Z0C0X

REV. NO.	DESCRIPTION	APP'D	DATE

SCALE: NONE
SUBMITTED:
DATE:
SURVEY BY:
FIELD BOOK NO.
DESIGNED BY:
DRAWN BY:
SHEET NO. OF SHEETS
DWG. NO.
Y0E30-0516

CADD DWG. FILE NO. :
Y0E30-ID3P.DWG

COHSTD.BDR

0 1 2 3
ORIGINAL SCALE IN INCHES FOR REDUCED PLANS

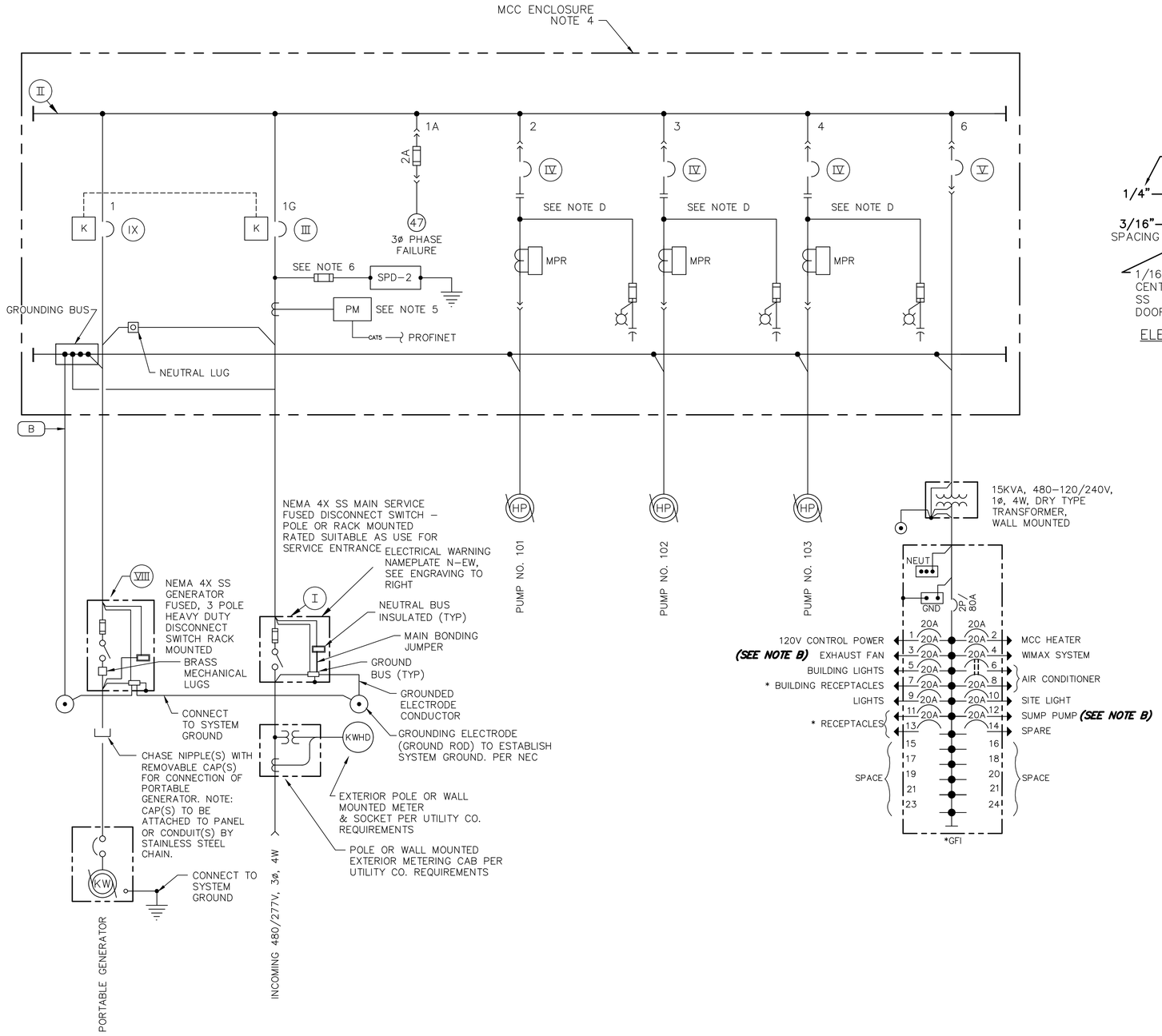

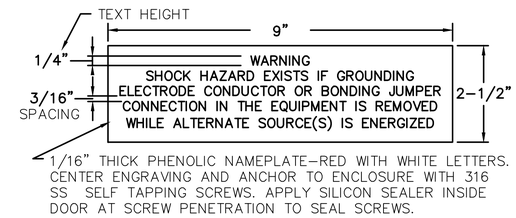

1/16" THICK PHENOLIC NAMEPLATE-RED WITH WHITE LETTERS. CENTER ENGRAVING AND ANCHOR TO ENCLOSURE WITH 316 SS SELF TAPPING SCREWS. APPLY SILICON SEALER INSIDE DOOR AT SCREW PENETRATION TO SEAL SCREWS.

ELECTRICAL WARNING NAMEPLATE N-EW ENGRAVING

LOAD CALCULATION		
ITEM	HP	FLI*
PUMP NO. 101	__ HP	__A
PUMP NO. 102	__ HP	__A
PUMP NO. 103	__ HP	__A
15 KVA TRANSFORMER	__	__A
SUBTOTAL		__A
25% OF LARGEST MOTOR LOAD		__A
MINIMUM AMPACITY		__A

* BASED ON SELECTED PUMP MFG DATA

NOTES TO DESIGN ENGINEER:

A. THESE LIFT STATION DRAWINGS ARE CONSIDERED TO BE DESIGN GUIDELINES FOR THE CONSTRUCTION OF CITY OF HOUSTON WASTEWATER SUBMERSIBLE LIFT STATIONS. THEIR INTENDED USE IS AS A FRAMEWORK FOR THE CONTRACTED DESIGN ENGINEER IN DEVELOPING SPECIFIC LIFT STATION DESIGNS.

IT IS THE RESPONSIBILITY OF THE CONTRACTED DESIGN ENGINEER TO VERIFY THE COMPLETENESS AND ACCURACY OF THE INFORMATION HEREIN CONTAINED AND TO ADJUST ACCORDING TO PROJECT SPECIFIC REQUIREMENTS.

B. PROVIDE NOTED ITEMS FOR STATIONS WITH VALVE VAULT DESIGNATED AS ALTERNATE LOW PROFILE, CONFIGURATION, ONLY. PROVIDE VALVE VAULT SUMP PUMP AND EXHAUST FAN FOR CLOSED TOP VALVE VAULTS ONLY (CONCRETE TOP SLAB WITH HATCHES). DELETE THESE ITEMS FOR VALVE VAULTS WITH OPEN GRATING TOPS.

C. FOR DESCRIPTION AND RATINGS OF ITEMS INDICATED ROMAN NUMERAL FLAGS, SEE DEVICE RATINGS SCHEDULES.

D. POWER FACTOR CORRECTION CAPACITOR IS REQUIRED FOR EACH PUMP RATED AT 20 HP OR GREATER. MOUNT CAPACITORS EXTERNAL TO MCC WITHIN THE CONTROL BUILDING.

E. PROVIDE SEPARATE 120/24 VAC CONTROL TRANSFORMER FOR PUMP PROTECTION MODULE POWER.

F. THE DESIGN ENGINEER SHALL INCORPORATE ONLY THE NECESSARY STANDARD GUIDELINE DRAWINGS AND DETAILS INTO HIS PROJECT CONTRACT DOCUMENTATION PACKAGE, AND SHALL ADJUST PAGE NUMBERS AND CROSS REFERENCING ACCORDINGLY.

G. THE DESIGN ENGINEER SHALL CONSULT THE CITY OF HOUSTON DESIGN GUIDELINES MANUAL, THE ENGINEERING DESIGN MANUAL, AND THE MASTER SPECIFICATIONS FOR FURTHER INSTRUCTIONS AND INFORMATION PERTINENT TO THESE STANDARD DESIGN GUIDELINE DRAWINGS.

H. THE DESIGN ENGINEER SHALL REMOVE THESE NOTES, ALL REFERENCES TO THESE NOTES, AND ANY OTHER EXTRANEOUS INFORMATION FROM THE DESIGN GUIDELINE DRAWINGS. DESIGN ENGINEER SHALL PROVIDE ANY NOTES OR OTHER APPROPRIATE INFORMATION NECESSARY TO COMPLETE THE LIFT STATION DESIGN.

NOTES:

1. FOR DESCRIPTION AND RATINGS OF ITEMS INDICATED WITH ROMAN NUMERAL FLAGS, SEE DEVICE RATINGS SCHEDULE.
2. CONTRACTOR TO COORDINATE POWER FACTOR CORRECTION CAPACITOR SIZE WITH PUMP MANUFACTURER. MINIMUM 95% POWER FACTOR CORRECTION AT FULL LOAD.
3. CONTRACTOR SHALL VERIFY ACTUAL AMPERAGES OF MOTORS AND SIZE STARTERS, MOTOR CIRCUIT PROTECTORS, ETC. ACCORDINGLY.
4. MCC RATED SUITABLE FOR USE AS SERVICE ENTRANCE.
5. POWER MONITOR SEE SPECS. 13446.
6. PROVIDE FUSE SIZE ACCORDING TO MANUFACTURER'S REQUIREMENTS.

3 PUMP INDOOR
SINGLE LINE DIAGRAM

PROJECT NO. R-000265-0XXX-X

TITLE CITY OF HOUSTON
DESIGN GUIDELINE DRAWINGS
FOR SUBMERSIBLE LIFT STATIONS

CITY OF HOUSTON
DEPARTMENT OF PUBLIC WORKS AND ENGINEERING
ENGINEERING AND CONSTRUCTION

DESIGN ENGINEER TO INCLUDE COH STANDARD TITLE BLOCK ON ALL DRAWINGS, SEE STANDARD TITLE BLOCK DETAIL ON SHEET Z0C0X

REV. NO.	DESCRIPTION	APP'D	DATE

SCALE: NONE
SUBMITTED:
DATE:
SURVEY BY:
FIELD BOOK NO.
DESIGNED BY:
DRAWN BY:
SHEET NO. OF SHEETS
DWG. NO. Y0E31-0516

CADD DWG. FILE NO. : Y0E31-ID3P.DWG

COHSTD.BDR

0 1 2 3 ORIGINAL SCALE IN INCHES FOR REDUCED PLANS

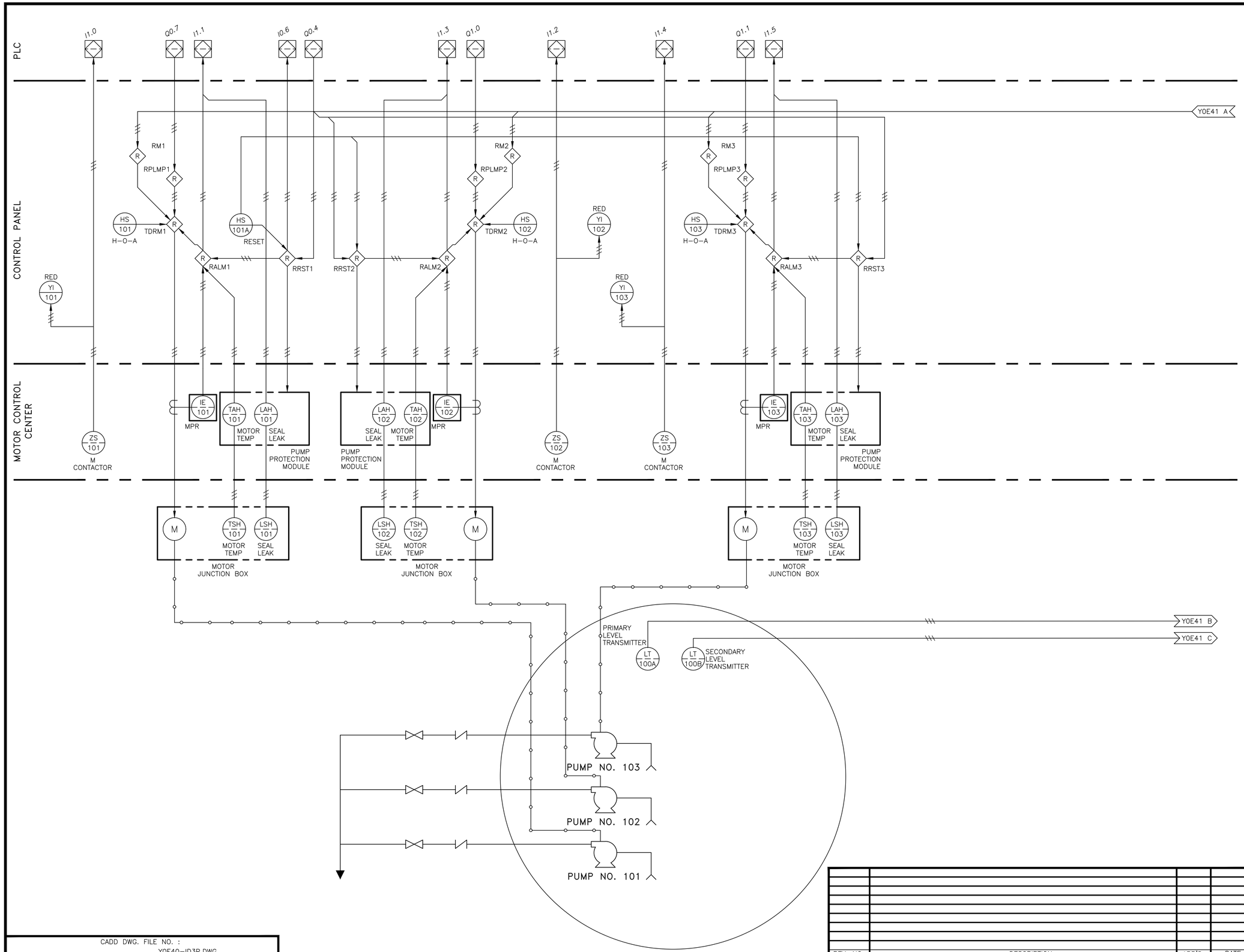

NOTES TO DESIGN ENGINEER:

A. THESE LIFT STATION DRAWINGS ARE CONSIDERED TO BE DESIGN GUIDELINES FOR THE CONSTRUCTION OF CITY OF HOUSTON WASTEWATER SUBMERSIBLE LIFT STATIONS. THEIR INTENDED USE IS AS A FRAMEWORK FOR THE CONTRACTED DESIGN ENGINEER IN DEVELOPING SPECIFIC LIFT STATION DESIGNS.

IT IS THE RESPONSIBILITY OF THE CONTRACTED DESIGN ENGINEER TO VERIFY THE COMPLETENESS AND ACCURACY OF THE INFORMATION HEREIN CONTAINED AND TO ADJUST ACCORDING TO PROJECT SPECIFIC REQUIREMENTS.

B. THE DESIGN ENGINEER SHALL DELETE TERMINAL DESIGNATION AND INTERCONNECTING WIRING BETWEEN WHEN BOTH PANELS ARE HOUSED IN A COMMON, FACTORY PRE-WIRED ENCLOSURE.

C. THE DESIGN ENGINEER SHALL INCORPORATE ONLY THE NECESSARY STANDARD GUIDELINE DRAWINGS AND DETAILS INTO HIS PROJECT CONTRACT DOCUMENTATION PACKAGE, AND SHALL ADJUST PAGE NUMBERS AND CROSS REFERENCING ACCORDINGLY.

D. THE DESIGN ENGINEER SHALL CONSULT THE CITY OF HOUSTON DESIGN GUIDELINES MANUAL, THE ENGINEERING DESIGN MANUAL, AND THE MASTER SPECIFICATIONS FOR FURTHER INSTRUCTIONS AND INFORMATION PERTINENT TO THESE STANDARD DESIGN GUIDELINE DRAWINGS.

E. THE DESIGN ENGINEER SHALL REMOVE THESE NOTES, ALL REFERENCES TO THESE NOTES, AND ANY OTHER EXTRANEOUS INFORMATION FROM THE DESIGN GUIDELINE DRAWINGS. DESIGN ENGINEER SHALL PROVIDE ANY NOTES OR OTHER APPROPRIATE INFORMATION NECESSARY TO COMPLETE THE LIFT STATION DESIGN.

3 PUMP INDOOR
PROCESS & INSTRUMENTATION
DIAGRAM

PROJECT NO. R-000265-0XXX-X

TITLE CITY OF HOUSTON
DESIGN GUIDELINE DRAWINGS
FOR SUBMERSIBLE LIFT STATIONS

CITY OF HOUSTON
DEPARTMENT OF PUBLIC WORKS AND ENGINEERING
ENGINEERING AND CONSTRUCTION

DESIGN ENGINEER TO INCLUDE COH STANDARD TITLE BLOCK ON ALL DRAWINGS, SEE STANDARD TITLE BLOCK DETAIL ON SHEET Z0C0X

REV. NO.	DESCRIPTION	APP'D	DATE

SCALE: NONE
SUBMITTED:
DATE:
SURVEY BY:
FIELD BOOK NO.
DESIGNED BY:
DRAWN BY:
SHEET NO. OF SHEETS
DWG. NO. Y0E40-0516

CADD DWG. FILE NO. : Y0E40-ID3P.DWG

COHSTD.BDR

0 1 2 3 ORIGINAL SCALE IN INCHES FOR REDUCED PLANS

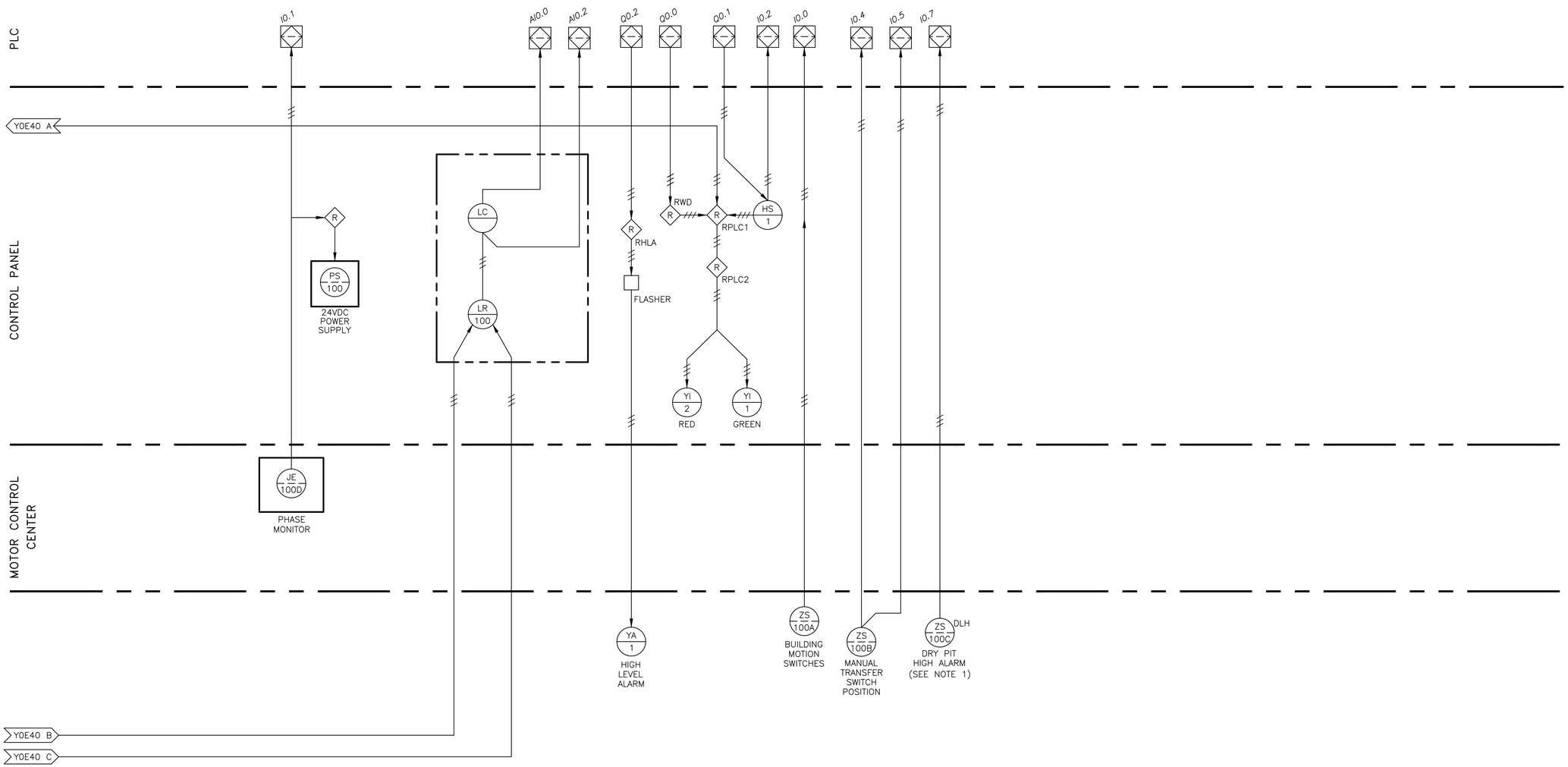

NOTES TO DESIGN ENGINEER:

A. THESE LIFT STATION DRAWINGS ARE CONSIDERED TO BE DESIGN GUIDELINES FOR THE CONSTRUCTION OF CITY OF HOUSTON WASTEWATER SUBMERSIBLE LIFT STATIONS. THEIR INTENDED USE IS AS A FRAMEWORK FOR THE CONTRACTED DESIGN ENGINEER IN DEVELOPING SPECIFIC LIFT STATION DESIGNS.

IT IS THE RESPONSIBILITY OF THE CONTRACTED DESIGN ENGINEER TO VERIFY THE COMPLETENESS AND ACCURACY OF THE INFORMATION HEREIN CONTAINED AND TO ADJUST ACCORDING TO PROJECT SPECIFIC REQUIREMENTS.

B. THE DESIGN ENGINEER SHALL DELETE TERMINAL DESIGNATION AND INTERCONNECTING WIRING BETWEEN WHEN BOTH PANELS ARE HOUSED IN A COMMON, FACTORY PRE-WIRED ENCLOSURE.

C. THE DESIGN ENGINEER SHALL INCORPORATE ONLY THE NECESSARY STANDARD GUIDELINE DRAWINGS AND DETAILS INTO HIS PROJECT CONTRACT DOCUMENTATION PACKAGE, AND SHALL ADJUST PAGE NUMBERS AND CROSS REFERENCING ACCORDINGLY.

D. THE DESIGN ENGINEER SHALL CONSULT THE CITY OF HOUSTON DESIGN GUIDELINES MANUAL, THE ENGINEERING DESIGN MANUAL, AND THE MASTER SPECIFICATIONS FOR FURTHER INSTRUCTIONS AND INFORMATION PERTINENT TO THESE STANDARD DESIGN GUIDELINE DRAWINGS.

E. THE DESIGN ENGINEER SHALL REMOVE THESE NOTES, ALL REFERENCES TO THESE NOTES, AND ANY OTHER EXTRANEOUS INFORMATION FROM THE DESIGN GUIDELINE DRAWINGS. DESIGN ENGINEER SHALL PROVIDE ANY NOTES OR OTHER APPROPRIATE INFORMATION NECESSARY TO COMPLETE THE LIFT STATION DESIGN.

NOTES:
1. DRY/WET PIT APPLICATION ONLY.

3 PUMP INDOOR
PROCESS & INSTRUMENTATION
DIAGRAM

PROJECT NO.
R-000265-0XXX-X

TITLE
CITY OF HOUSTON
DESIGN GUIDELINE DRAWINGS
FOR SUBMERSIBLE LIFT STATIONS

CITY OF HOUSTON
DEPARTMENT OF PUBLIC WORKS AND ENGINEERING
ENGINEERING AND CONSTRUCTION

DESIGN ENGINEER TO INCLUDE COH STANDARD TITLE BLOCK ON ALL DRAWINGS, SEE STANDARD TITLE BLOCK DETAIL ON SHEET Z0C0X

REV. NO.	DESCRIPTION	APP'D	DATE

SCALE: NONE
SUBMITTED:
DATE:
SURVEY BY:
FIELD BOOK NO.
DESIGNED BY:
DRAWN BY:
SHEET NO. OF SHEETS
DWG. NO.
Y0E41-0516

CADD DWG. FILE NO. :
Y0E41-ID3P.DWG

COHSTD.BDR

0 1 2 3 ORIGINAL SCALE IN INCHES FOR REDUCED PLANS

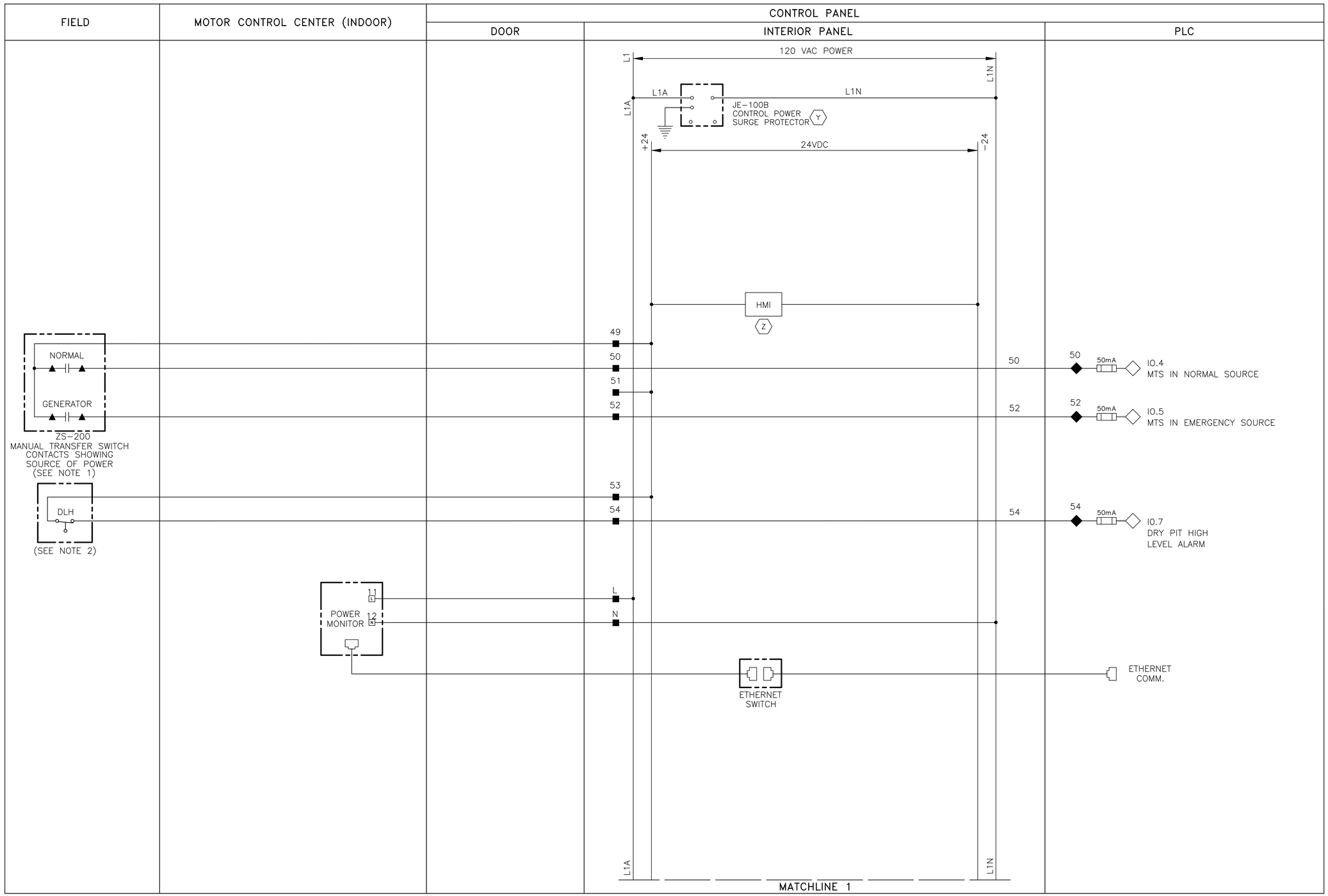

NOTES TO DESIGN ENGINEER:

A. THESE LIFT STATION DRAWINGS ARE CONSIDERED TO BE DESIGN GUIDELINES FOR THE CONSTRUCTION OF CITY OF HOUSTON WASTEWATER SUBMERSIBLE LIFT STATIONS. THEIR INTENDED USE IS AS A FRAMEWORK FOR THE CONTRACTED DESIGN ENGINEER IN DEVELOPING SPECIFIC LIFT STATION DESIGNS.

IT IS THE RESPONSIBILITY OF THE CONTRACTED DESIGN ENGINEER TO VERIFY THE COMPLETENESS AND ACCURACY OF THE INFORMATION HEREIN CONTAINED AND TO ADJUST ACCORDING TO PROJECT SPECIFIC REQUIREMENTS.

B. THE DESIGN ENGINEER SHALL DELETE TERMINAL DESIGNATION AND INTERCONNECTING WIRING BETWEEN WHEN BOTH PANELS ARE HOUSED IN A COMMON, FACTORY PRE-WIRED ENCLOSURE.

C. THE DESIGN ENGINEER SHALL INCORPORATE ONLY THE NECESSARY STANDARD GUIDELINE DRAWINGS AND DETAILS INTO HIS PROJECT CONTRACT DOCUMENTATION PACKAGE, AND SHALL ADJUST PAGE NUMBERS AND CROSS REFERENCING ACCORDINGLY.

D. THE DESIGN ENGINEER SHALL CONSULT THE CITY OF HOUSTON DESIGN GUIDELINES MANUAL, THE ENGINEERING DESIGN MANUAL, AND THE MASTER SPECIFICATIONS FOR FURTHER INSTRUCTIONS AND INFORMATION PERTINENT TO THESE STANDARD DESIGN GUIDELINE DRAWINGS.

E. THE DESIGN ENGINEER SHALL REMOVE THESE NOTES, ALL REFERENCES TO THESE NOTES, AND ANY OTHER EXTRANEOUS INFORMATION FROM THE DESIGN GUIDELINE DRAWINGS. DESIGN ENGINEER SHALL PROVIDE ANY NOTES OR OTHER APPROPRIATE INFORMATION NECESSARY TO COMPLETE THE LIFT STATION DESIGN.

NOTES:
1. PROVIDE MANUAL TRANSFER SWITCH DRY CONTACT.
2. DRY/WET PIT APPLICATION ONLY.

LEGEND

△ DEVICE OR FIELD TERMINAL LOCATED AT MOTOR
✳ DEVICE OR FIELD TERMINAL LOCATED REMOTE
□ DEVICE OR FIELD TERMINAL LOCATED AT MCC/POWER PANEL
■ FIELD TERMINAL LOCATED AT CONTROL PANEL
▲ REMOTE TERMINAL
● DEVICE TERMINAL NO.
◆ PLC INTERFACE TERMINAL

REV. NO.	DESCRIPTION	APP'D	DATE

3 PUMP INDOOR
CONTROL PANEL
CONTROL WIRING DIAGRAM

PROJECT NO. R-000265-0XXX-X

TITLE CITY OF HOUSTON
DESIGN GUIDELINE DRAWINGS
FOR SUBMERSIBLE LIFT STATIONS

CITY OF HOUSTON
DEPARTMENT OF PUBLIC WORKS AND ENGINEERING
ENGINEERING AND CONSTRUCTION

DESIGN ENGINEER TO INCLUDE COH STANDARD TITLE BLOCK ON ALL DRAWINGS, SEE STANDARD TITLE BLOCK DETAIL ON SHEET Z0C0X

SCALE: NONE
DESIGNED BY:
DRAWN BY:
SUBMITTED:
DATE:
SURVEY BY:
FIELD BOOK NO.
SHEET NO. OF SHEETS
DWG. NO. Y0E50-0516

CADD DWG. FILE NO. : Y0E50-ID3P.DWG

COHSTD.BDR

0 1 2 3 ORIGINAL SCALE IN INCHES FOR REDUCED PLANS

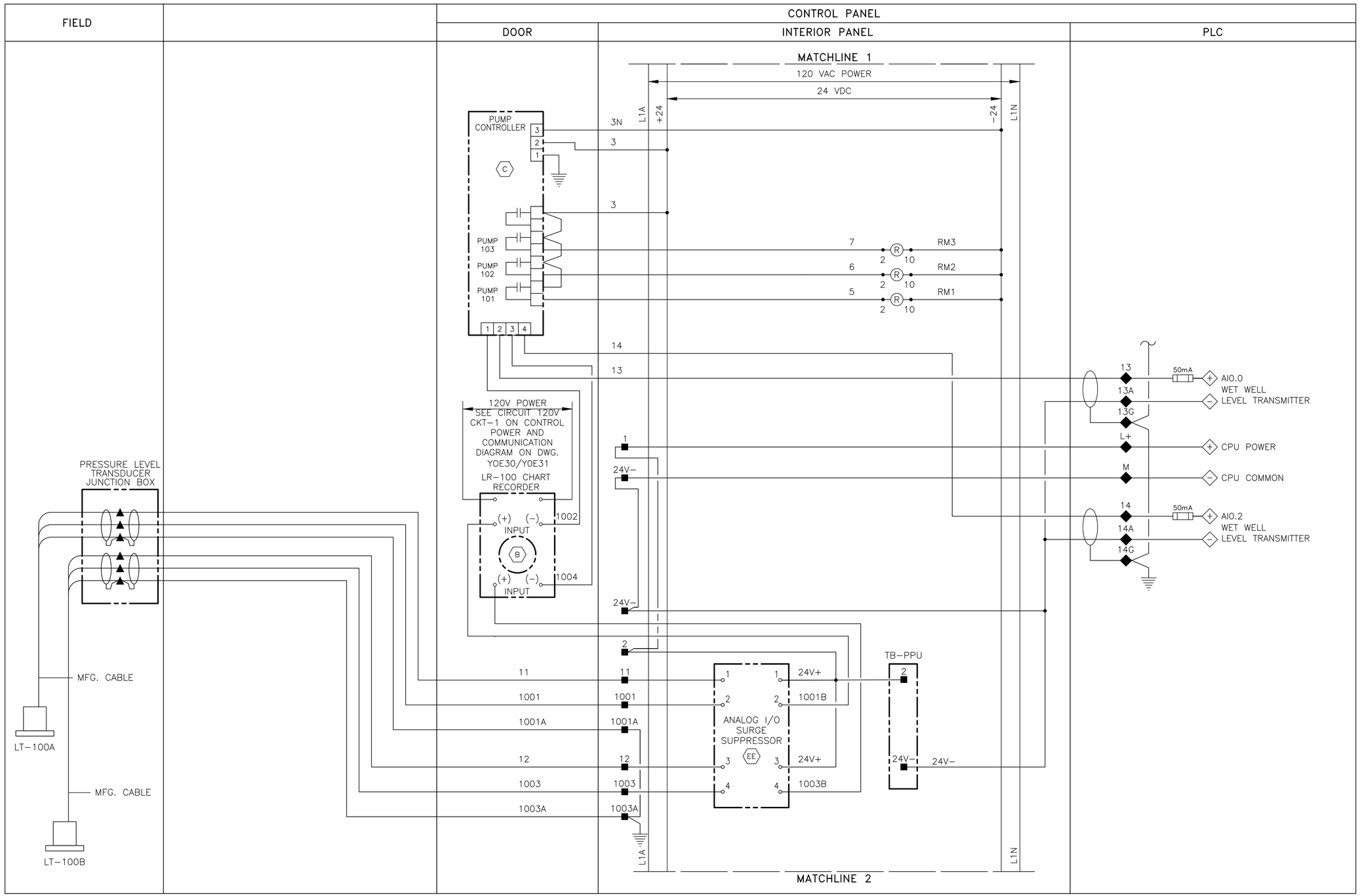

LEGEND

- △ DEVICE OR FIELD TERMINAL LOCATED AT MOTOR
- ✳ DEVICE OR FIELD TERMINAL LOCATED REMOTE
- □ DEVICE OR FIELD TERMINAL LOCATED AT MCC/POWER PANEL
- ■ FIELD TERMINAL LOCATED AT CONTROL PANEL
- ▲ REMOTE TERMINAL
- ● DEVICE TERMINAL NO.
- ◆ PLC INTERFACE TERMINAL

NOTES TO DESIGN ENGINEER:

A. THESE LIFT STATION DRAWINGS ARE CONSIDERED TO BE DESIGN GUIDELINES FOR THE CONSTRUCTION OF CITY OF HOUSTON WASTEWATER SUBMERSIBLE LIFT STATIONS. THEIR INTENDED USE IS AS A FRAMEWORK FOR THE CONTRACTED DESIGN ENGINEER IN DEVELOPING SPECIFIC LIFT STATION DESIGNS.

IT IS THE RESPONSIBILITY OF THE CONTRACTED DESIGN ENGINEER TO VERIFY THE COMPLETENESS AND ACCURACY OF THE INFORMATION HEREIN CONTAINED AND TO ADJUST ACCORDING TO PROJECT SPECIFIC REQUIREMENTS.

B. THE DESIGN ENGINEER SHALL DELETE TERMINAL DESIGNATION AND INTERCONNECTING WIRING BETWEEN WHEN BOTH PANELS ARE HOUSED IN A COMMON, FACTORY PRE-WIRED ENCLOSURE.

C. THE DESIGN ENGINEER SHALL INCORPORATE ONLY THE NECESSARY STANDARD GUIDELINE DRAWINGS AND DETAILS INTO HIS PROJECT CONTRACT DOCUMENTATION PACKAGE, AND SHALL ADJUST PAGE NUMBERS AND CROSS REFERENCING ACCORDINGLY.

D. THE DESIGN ENGINEER SHALL CONSULT THE CITY OF HOUSTON DESIGN GUIDELINES MANUAL, THE ENGINEERING DESIGN MANUAL, AND THE MASTER SPECIFICATIONS FOR FURTHER INSTRUCTIONS AND INFORMATION PERTINENT TO THESE STANDARD DESIGN GUIDELINE DRAWINGS.

E. THE DESIGN ENGINEER SHALL REMOVE THESE NOTES, ALL REFERENCES TO THESE NOTES, AND ANY OTHER EXTRANEOUS INFORMATION FROM THE DESIGN GUIDELINE DRAWINGS. DESIGN ENGINEER SHALL PROVIDE ANY NOTES OR OTHER APPROPRIATE INFORMATION NECESSARY TO COMPLETE THE LIFT STATION DESIGN.

3 PUMP INDOOR
CONTROL PANEL
CONTROL WIRING DIAGRAM

PROJECT NO.
R-000265-0XXX-X

TITLE
CITY OF HOUSTON
DESIGN GUIDELINE DRAWINGS
FOR SUBMERSIBLE LIFT STATIONS

CITY OF HOUSTON
DEPARTMENT OF PUBLIC WORKS AND ENGINEERING
ENGINEERING AND CONSTRUCTION

DESIGN ENGINEER TO INCLUDE COH STANDARD TITLE BLOCK ON ALL DRAWINGS, SEE STANDARD TITLE BLOCK DETAIL ON SHEET Z0C0X

REV. NO.	DESCRIPTION	APP'D	DATE

SCALE: NONE
SUBMITTED:
DATE:
SURVEY BY:
FIELD BOOK NO.
DESIGNED BY:
DRAWN BY:
SHEET NO. OF SHEETS
DWG. NO. Y0E51-0516

CADD DWG. FILE NO. : Y0E51-ID3P.DWG

COHSTD.BDR

0 1 2 3 ORIGINAL SCALE IN INCHES FOR REDUCED PLANS

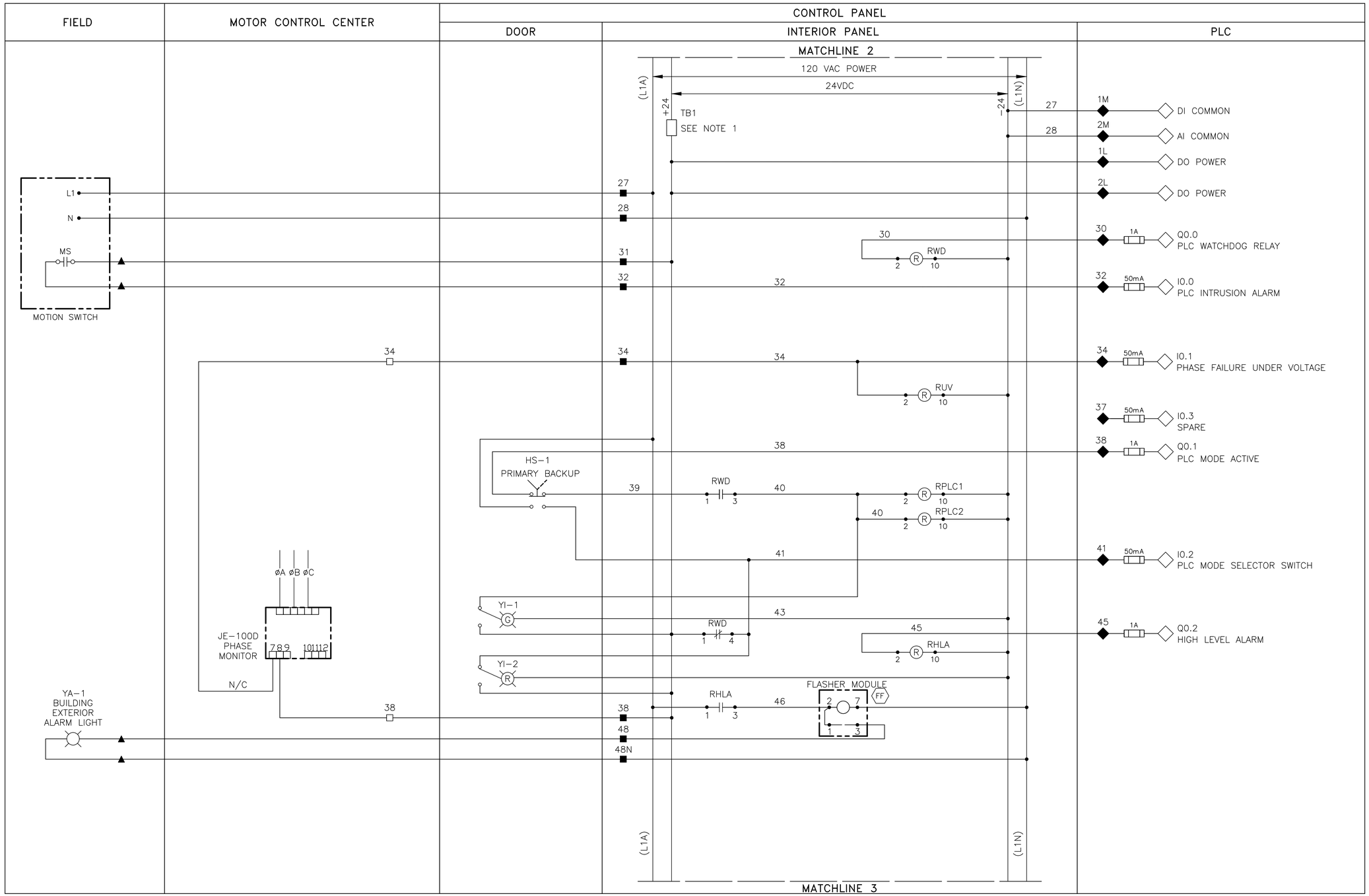

LEGEND

- △ DEVICE OR FIELD TERMINAL LOCATED AT MOTOR
- ✳ DEVICE OR FIELD TERMINAL LOCATED REMOTE
- □ DEVICE OR FIELD TERMINAL LOCATED AT MCC
- ■ FIELD TERMINAL LOCATED AT CONTROL PANEL
- ▲ REMOTE TERMINAL
- ● DEVICE TERMINAL NO.
- ◆ PLC INTERFACE TERMINAL

NOTES TO DESIGN ENGINEER:

A. THESE LIFT STATION DRAWINGS ARE CONSIDERED TO BE DESIGN GUIDELINES FOR THE CONSTRUCTION OF CITY OF HOUSTON WASTEWATER SUBMERSIBLE LIFT STATIONS. THEIR INTENDED USE IS AS A FRAMEWORK FOR THE CONTRACTED DESIGN ENGINEER IN DEVELOPING SPECIFIC LIFT STATION DESIGNS.

IT IS THE RESPONSIBILITY OF THE CONTRACTED DESIGN ENGINEER TO VERIFY THE COMPLETENESS AND ACCURACY OF THE INFORMATION HEREIN CONTAINED AND TO ADJUST ACCORDING TO PROJECT SPECIFIC REQUIREMENTS.

B. THE DESIGN ENGINEER SHALL DELETE TERMINAL DESIGNATION AND INTERCONNECTING WIRING BETWEEN WHEN BOTH PANELS ARE HOUSED IN A COMMON, FACTORY PRE-WIRED ENCLOSURE.

C. THE DESIGN ENGINEER SHALL INCORPORATE ONLY THE NECESSARY STANDARD GUIDELINE DRAWINGS AND DETAILS INTO HIS PROJECT CONTRACT DOCUMENTATION PACKAGE, AND SHALL ADJUST PAGE NUMBERS AND CROSS REFERENCING ACCORDINGLY.

D. THE DESIGN ENGINEER SHALL CONSULT THE CITY OF HOUSTON DESIGN GUIDELINES MANUAL, THE ENGINEERING DESIGN MANUAL, AND THE MASTER SPECIFICATIONS FOR FURTHER INSTRUCTIONS AND INFORMATION PERTINENT TO THESE STANDARD DESIGN GUIDELINE DRAWINGS.

E. THE DESIGN ENGINEER SHALL REMOVE THESE NOTES, ALL REFERENCES TO THESE NOTES, AND ANY OTHER EXTRANEOUS INFORMATION FROM THE DESIGN GUIDELINE DRAWINGS. DESIGN ENGINEER SHALL PROVIDE ANY NOTES OR OTHER APPROPRIATE INFORMATION NECESSARY TO COMPLETE THE LIFT STATION DESIGN.

NOTES:

1. FUSED TERMINAL ON TERMINAL BLOCK TB4 SEE CONTROL POWER AND COMMUNICATION WIRING DIAGRAM.

3 PUMP INDOOR
CONTROL PANEL
CONTROL WIRING DIAGRAM

PROJECT NO. R-000265-0XXX-X

TITLE CITY OF HOUSTON
DESIGN GUIDELINE DRAWINGS
FOR SUBMERSIBLE LIFT STATIONS

CITY OF HOUSTON
DEPARTMENT OF PUBLIC WORKS AND ENGINEERING
ENGINEERING AND CONSTRUCTION

DESIGN ENGINEER TO INCLUDE COH STANDARD TITLE BLOCK ON ALL DRAWINGS, SEE STANDARD TITLE BLOCK DETAIL ON SHEET Z0C0X

REV. NO.	DESCRIPTION	APP'D	DATE

SCALE: NONE
SUBMITTED:
DATE:
SURVEY BY:
FIELD BOOK NO.
DESIGNED BY:
DRAWN BY:
SHEET NO. OF SHEETS
DWG. NO. Y0E52-0516

CADD DWG. FILE NO. : Y0E52-ID3P.DWG

COHSTD.BDR

0 1 2 3 ORIGINAL SCALE IN INCHES FOR REDUCED PLANS

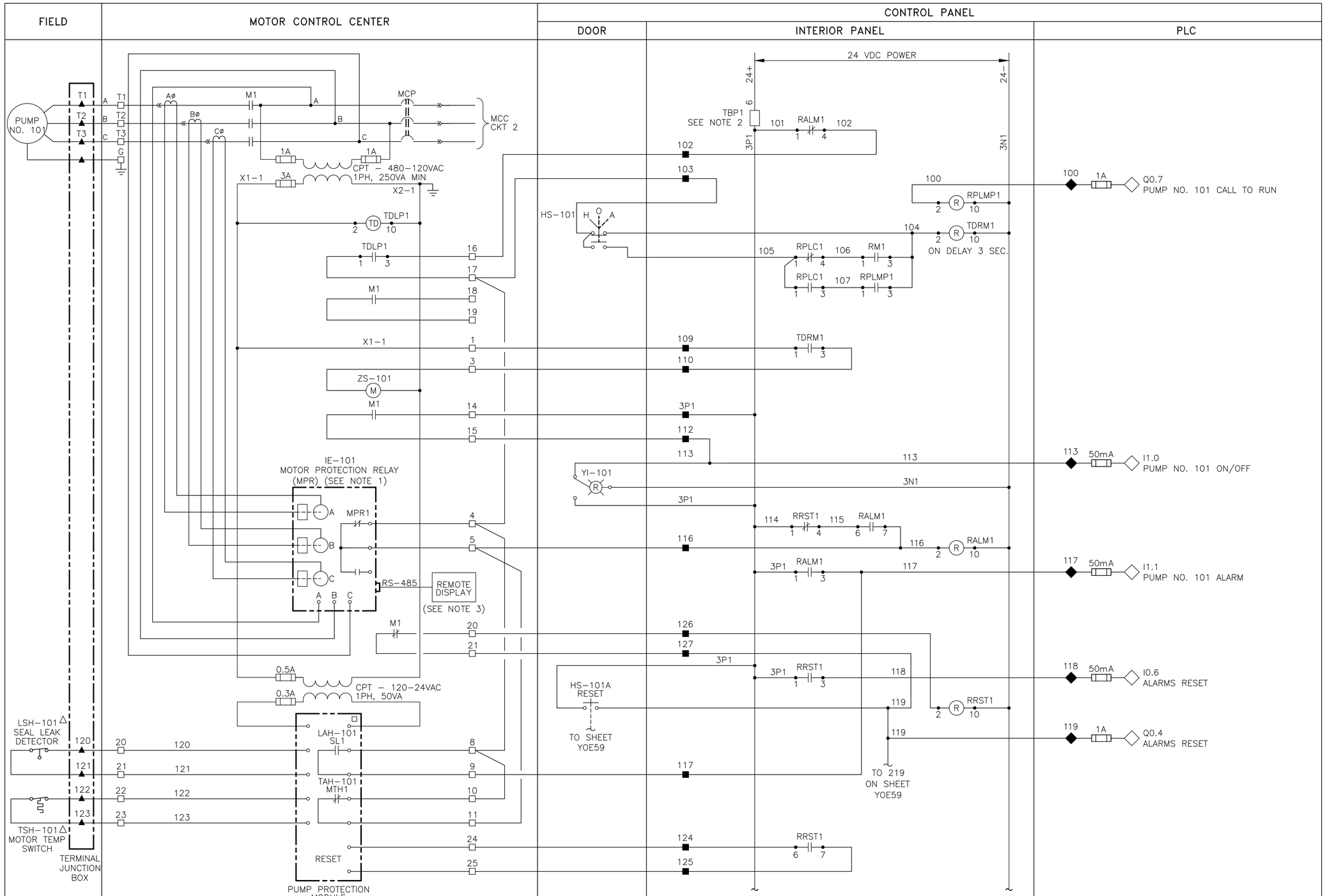

LEGEND

- △ DEVICE OR FIELD TERMINAL LOCATED AT MOTOR
- ✳ DEVICE OR FIELD TERMINAL LOCATED REMOTE
- □ DEVICE OR FIELD TERMINAL LOCATED AT MCC
- ■ FIELD TERMINAL LOCATED AT CONTROL PANEL
- ▲ REMOTE TERMINAL
- ● DEVICE TERMINAL NO.
- ◆ PLC INTERFACE TERMINAL

NOTES TO DESIGN ENGINEER:

A. THESE LIFT STATION DRAWINGS ARE CONSIDERED TO BE DESIGN GUIDELINES FOR THE CONSTRUCTION OF CITY OF HOUSTON WASTEWATER SUBMERSIBLE LIFT STATIONS. THEIR INTENDED USE IS AS A FRAMEWORK FOR THE CONTRACTED DESIGN ENGINEER IN DEVELOPING SPECIFIC LIFT STATION DESIGNS.

IT IS THE RESPONSIBILITY OF THE CONTRACTED DESIGN ENGINEER TO VERIFY THE COMPLETENESS AND ACCURACY OF THE INFORMATION HEREIN CONTAINED AND TO ADJUST ACCORDING TO PROJECT SPECIFIC REQUIREMENTS.

B. THE DESIGN ENGINEER SHALL DELETE TERMINAL DESIGNATION AND INTERCONNECTING WIRING BETWEEN WHEN BOTH PANELS ARE HOUSED IN A COMMON, FACTORY PRE-WIRED ENCLOSURE.

C. THE DESIGN ENGINEER SHALL INCORPORATE ONLY THE NECESSARY STANDARD GUIDELINE DRAWINGS AND DETAILS INTO HIS PROJECT CONTRACT DOCUMENTATION PACKAGE, AND SHALL ADJUST PAGE NUMBERS AND CROSS REFERENCING ACCORDINGLY.

D. THE DESIGN ENGINEER SHALL CONSULT THE CITY OF HOUSTON DESIGN GUIDELINES MANUAL, THE ENGINEERING DESIGN MANUAL, AND THE MASTER SPECIFICATIONS FOR FURTHER INSTRUCTIONS AND INFORMATION PERTINENT TO THESE STANDARD DESIGN GUIDELINE DRAWINGS.

E. THE DESIGN ENGINEER SHALL REMOVE THESE NOTES, ALL REFERENCES TO THESE NOTES, AND ANY OTHER EXTRANEOUS INFORMATION FROM THE DESIGN GUIDELINE DRAWINGS. DESIGN ENGINEER SHALL PROVIDE ANY NOTES OR OTHER APPROPRIATE INFORMATION NECESSARY TO COMPLETE THE LIFT STATION DESIGN.

NOTES:

1. MOTOR OVERLOAD RELAY OUTPUT CONTACT SHOWN IS NORMALLY CLOSED WHEN RELAY IS DE–ENGERGIZED, OPEN WHEN ENERGIZED, AND CLOSED WHEN IN ALARM. VERIFY OPERATION OF RELAY PROVIDED AND ADJUST CONNECTION OF RMOR AUXILIARY RELAYS.
2. FUSED TERMINAL ON TERMINAL BLOCK TB4 SEE CONTROL POWER AND COMMUNICATION WIRING DIAGRAM.
3. REMOTE DISPLAY SHALL BE MOUNTED IN MCC CUBICLE, AND SET TO DISPLAY CURRENT READING.

3 PUMP INDOOR
PUMP 101
CONTROL WIRING DIAGRAM

PROJECT NO. R-000265-0XXX-X

TITLE CITY OF HOUSTON
DESIGN GUIDELINE DRAWINGS
FOR SUBMERSIBLE LIFT STATIONS

CITY OF HOUSTON
DEPARTMENT OF PUBLIC WORKS AND ENGINEERING
ENGINEERING AND CONSTRUCTION

DESIGN ENGINEER TO INCLUDE COH STANDARD TITLE BLOCK ON ALL DRAWINGS, SEE STANDARD TITLE BLOCK DETAIL ON SHEET Z0C0X

REV. NO.	DESCRIPTION	APP'D	DATE

SCALE: NONE
SUBMITTED:
DATE:
SURVEY BY:
FIELD BOOK NO.
DESIGNED BY:
DRAWN BY:
SHEET NO. OF SHEETS
DWG. NO. YOE58–0516

CADD DWG. FILE NO. : YOE58–ID3P.DWG

COHSTD.BDR

0 1 2 3 ORIGINAL SCALE IN INCHES FOR REDUCED PLANS

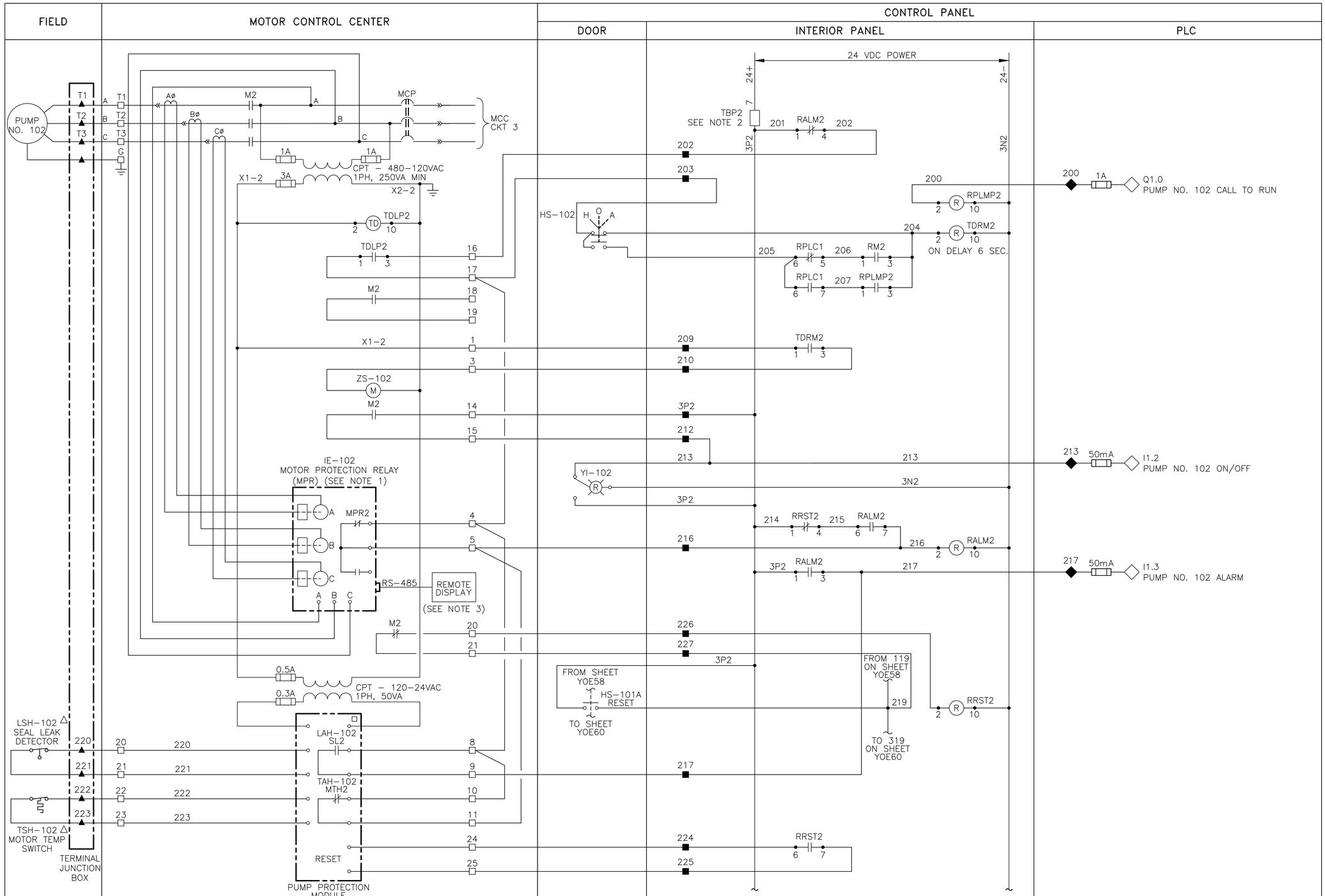

LEGEND

- △ DEVICE OR FIELD TERMINAL LOCATED AT MOTOR
- ✳ DEVICE OR FIELD TERMINAL LOCATED REMOTE
- □ DEVICE OR FIELD TERMINAL LOCATED AT MCC
- ■ FIELD TERMINAL LOCATED AT CONTROL PANEL
- ▲ REMOTE TERMINAL
- ● DEVICE TERMINAL NO.
- ◆ PLC INTERFACE TERMINAL

CADD DWG. FILE NO. : YOE59–ID3P.DWG

COHSTD.BDR

0 1 2 3 ORIGINAL SCALE IN INCHES FOR REDUCED PLANS

REV. NO.	DESCRIPTION	APP'D	DATE

NOTES TO DESIGN ENGINEER:

A. THESE LIFT STATION DRAWINGS ARE CONSIDERED TO BE DESIGN GUIDELINES FOR THE CONSTRUCTION OF CITY OF HOUSTON WASTEWATER SUBMERSIBLE LIFT STATIONS. THEIR INTENDED USE IS AS A FRAMEWORK FOR THE CONTRACTED DESIGN ENGINEER IN DEVELOPING SPECIFIC LIFT STATION DESIGNS.

IT IS THE RESPONSIBILITY OF THE CONTRACTED DESIGN ENGINEER TO VERIFY THE COMPLETENESS AND ACCURACY OF THE INFORMATION HEREIN CONTAINED AND TO ADJUST ACCORDING TO PROJECT SPECIFIC REQUIREMENTS.

B. THE DESIGN ENGINEER SHALL DELETE TERMINAL DESIGNATION AND INTERCONNECTING WIRING BETWEEN WHEN BOTH PANELS ARE HOUSED IN A COMMON, FACTORY PRE-WIRED ENCLOSURE.

C. THE DESIGN ENGINEER SHALL INCORPORATE ONLY THE NECESSARY STANDARD GUIDELINE DRAWINGS AND DETAILS INTO HIS PROJECT CONTRACT DOCUMENTATION PACKAGE, AND SHALL ADJUST PAGE NUMBERS AND CROSS REFERENCING ACCORDINGLY.

D. THE DESIGN ENGINEER SHALL CONSULT THE CITY OF HOUSTON DESIGN GUIDELINES MANUAL, THE ENGINEERING DESIGN MANUAL, AND THE MASTER SPECIFICATIONS FOR FURTHER INSTRUCTIONS AND INFORMATION PERTINENT TO THESE STANDARD DESIGN GUIDELINE DRAWINGS.

E. THE DESIGN ENGINEER SHALL REMOVE THESE NOTES, ALL REFERENCES TO THESE NOTES, AND ANY OTHER EXTRANEOUS INFORMATION FROM THE DESIGN GUIDELINE DRAWINGS. DESIGN ENGINEER SHALL PROVIDE ANY NOTES OR OTHER APPROPRIATE INFORMATION NECESSARY TO COMPLETE THE LIFT STATION DESIGN.

NOTES:

1. MOTOR OVERLOAD RELAY OUTPUT CONTACT SHOWN IS NORMALLY CLOSED WHEN RELAY IS DE–ENGERGIZED, OPEN WHEN ENERGIZED, AND CLOSED WHEN IN ALARM. VERIFY OPERATION OF RELAY PROVIDED AND ADJUST CONNECTION OF RMOR AUXILIARY RELAYS.
2. FUSED TERMINAL ON TERMINAL BLOCK TB4 SEE CONTROL POWER AND COMMUNICATION WIRING DIAGRAM.
3. REMOTE DISPLAY SHALL BE MOUNTED IN MCC CUBICLE, AND SET TO DISPLAY CURRENT READING.

3 PUMP INDOOR
PUMP 102
CONTROL WIRING DIAGRAM

PROJECT NO. R–000265–0XXX–X

TITLE CITY OF HOUSTON
DESIGN GUIDELINE DRAWINGS
FOR SUBMERSIBLE LIFT STATIONS

CITY OF HOUSTON
DEPARTMENT OF PUBLIC WORKS AND ENGINEERING
ENGINEERING AND CONSTRUCTION

DESIGN ENGINEER TO INCLUDE COH STANDARD TITLE BLOCK ON ALL DRAWINGS, SEE STANDARD TITLE BLOCK DETAIL ON SHEET ZOCOX

SCALE: NONE	DESIGNED BY:
SUBMITTED:	DRAWN BY:
DATE:	SHEET NO. OF SHEETS
SURVEY BY:	DWG. NO. YOE59–0516
FIELD BOOK NO.	

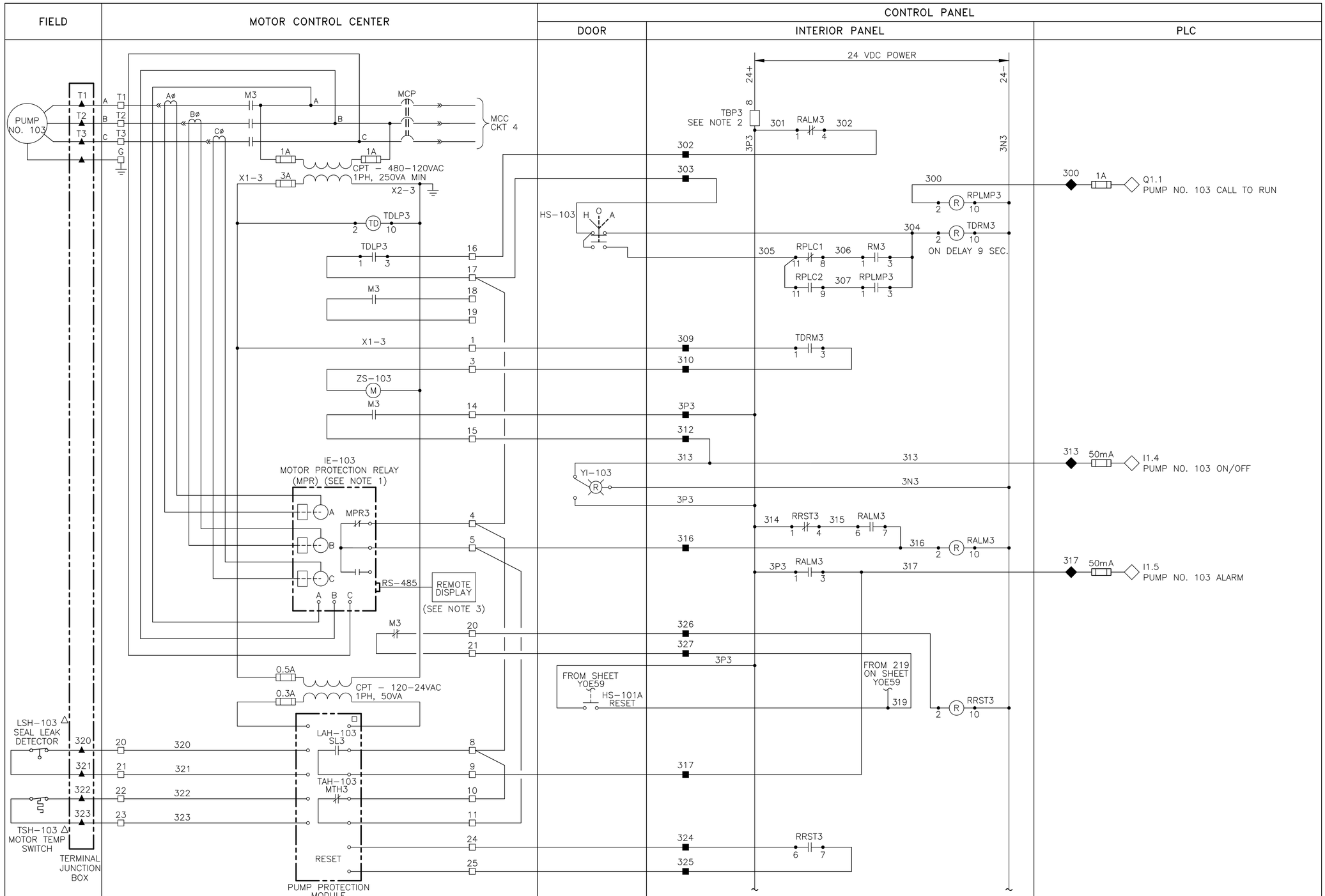

LEGEND

- △ DEVICE OR FIELD TERMINAL LOCATED AT MOTOR
- ✳ DEVICE OR FIELD TERMINAL LOCATED REMOTE
- □ DEVICE OR FIELD TERMINAL LOCATED AT MCC
- ■ FIELD TERMINAL LOCATED AT CONTROL PANEL
- ▲ REMOTE TERMINAL
- ● DEVICE TERMINAL NO.
- ◆ PLC INTERFACE TERMINAL

NOTES TO DESIGN ENGINEER:

A. THESE LIFT STATION DRAWINGS ARE CONSIDERED TO BE DESIGN GUIDELINES FOR THE CONSTRUCTION OF CITY OF HOUSTON WASTEWATER SUBMERSIBLE LIFT STATIONS. THEIR INTENDED USE IS AS A FRAMEWORK FOR THE CONTRACTED DESIGN ENGINEER IN DEVELOPING SPECIFIC LIFT STATION DESIGNS.

IT IS THE RESPONSIBILITY OF THE CONTRACTED DESIGN ENGINEER TO VERIFY THE COMPLETENESS AND ACCURACY OF THE INFORMATION HEREIN CONTAINED AND TO ADJUST ACCORDING TO PROJECT SPECIFIC REQUIREMENTS.

B. THE DESIGN ENGINEER SHALL DELETE TERMINAL DESIGNATION AND INTERCONNECTING WIRING BETWEEN WHEN BOTH PANELS ARE HOUSED IN A COMMON, FACTORY PRE-WIRED ENCLOSURE.

C. THE DESIGN ENGINEER SHALL INCORPORATE ONLY THE NECESSARY STANDARD GUIDELINE DRAWINGS AND DETAILS INTO HIS PROJECT CONTRACT DOCUMENTATION PACKAGE, AND SHALL ADJUST PAGE NUMBERS AND CROSS REFERENCING ACCORDINGLY.

D. THE DESIGN ENGINEER SHALL CONSULT THE CITY OF HOUSTON DESIGN GUIDELINES MANUAL, THE ENGINEERING DESIGN MANUAL, AND THE MASTER SPECIFICATIONS FOR FURTHER INSTRUCTIONS AND INFORMATION PERTINENT TO THESE STANDARD DESIGN GUIDELINE DRAWINGS.

E. THE DESIGN ENGINEER SHALL REMOVE THESE NOTES, ALL REFERENCES TO THESE NOTES, AND ANY OTHER EXTRANEOUS INFORMATION FROM THE DESIGN GUIDELINE DRAWINGS. DESIGN ENGINEER SHALL PROVIDE ANY NOTES OR OTHER APPROPRIATE INFORMATION NECESSARY TO COMPLETE THE LIFT STATION DESIGN.

NOTES:

1. MOTOR OVERLOAD RELAY OUTPUT CONTACT SHOWN IS NORMALLY CLOSED WHEN RELAY IS DE–ENGERGIZED, OPEN WHEN ENERGIZED, AND CLOSED WHEN IN ALARM. VERIFY OPERATION OF RELAY PROVIDED AND ADJUST CONNECTION OF RMOR AUXILIARY RELAYS.
2. FUSED TERMINAL ON TERMINAL BLOCK TB4 SEE CONTROL POWER AND COMMUNICATION WIRING DIAGRAM.
3. REMOTE DISPLAY SHALL BE MOUNTED IN MCC CUBICLE, AND SET TO DISPLAY CURRENT READING.

3 PUMP INDOOR
PUMP 103
CONTROL WIRING DIAGRAM

PROJECT NO. R–000265–0XXX–X

TITLE CITY OF HOUSTON
DESIGN GUIDELINE DRAWINGS
FOR SUBMERSIBLE LIFT STATIONS

CITY OF HOUSTON
DEPARTMENT OF PUBLIC WORKS AND ENGINEERING
ENGINEERING AND CONSTRUCTION

DESIGN ENGINEER TO INCLUDE COH STANDARD TITLE BLOCK ON ALL DRAWINGS, SEE STANDARD TITLE BLOCK DETAIL ON SHEET Z0C0X

REV. NO.	DESCRIPTION	APP'D	DATE

SCALE: NONE
SUBMITTED:
DATE:
SURVEY BY:
FIELD BOOK NO.
DESIGNED BY:
DRAWN BY:
SHEET NO. OF SHEETS
DWG. NO. YOE60–0516

CADD DWG. FILE NO. : YOE60–ID3P.DWG

COHSTD.BDR

0 1 2 3 ORIGINAL SCALE IN INCHES FOR REDUCED PLANS

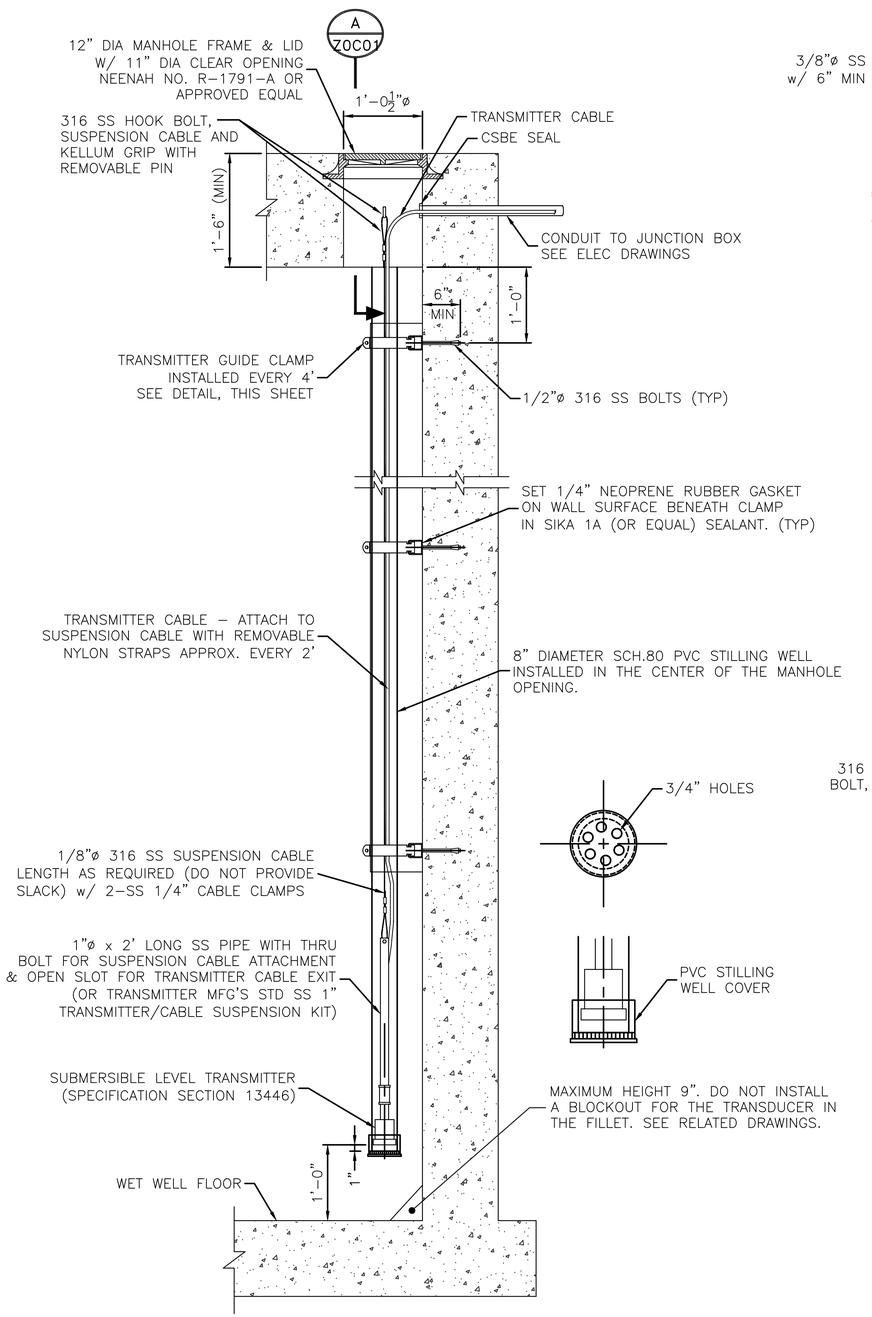

SUBMERSIBLE TRANSDUCER WELL LEVEL GAUGING SYSTEM
TYP INSTALLATION DETAIL

SCALE: 1" = 1'-0"

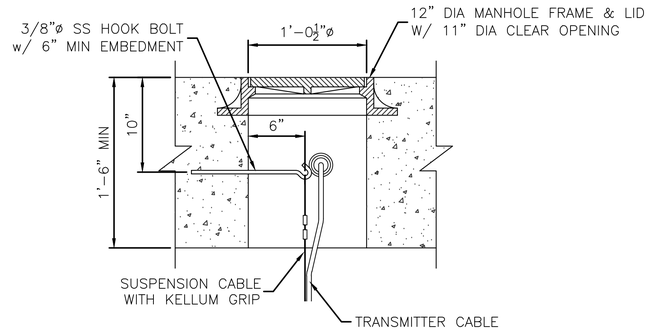

SECTION A

SCALE: 1 1/2" = 1'-0"

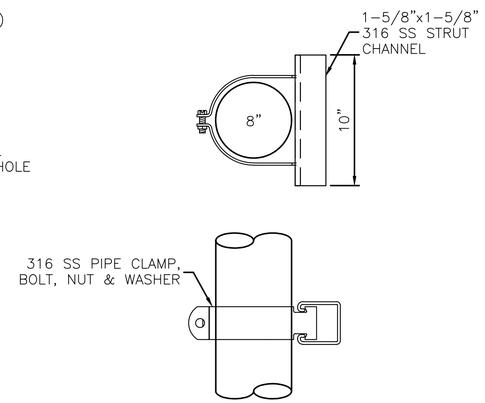

TRANSMITTER GUIDE CLAMP DETAIL

SCALE: NOT TO SCALE

NOTES TO DESIGN ENGINEER:

A. THESE LIFT STATION DRAWINGS ARE CONSIDERED TO BE DESIGN GUIDELINES FOR THE CONSTRUCTION OF CITY OF HOUSTON WASTEWATER SUBMERSIBLE LIFT STATIONS. THEIR INTENDED USE IS AS A FRAMEWORK FOR THE CONTRACTED DESIGN ENGINEER IN DEVELOPING SPECIFIC LIFT STATION DESIGNS.

IT IS THE RESPONSIBILITY OF THE CONTRACTED DESIGN ENGINEER TO VERIFY THE COMPLETENESS AND ACCURACY OF THE INFORMATION HEREIN CONTAINED AND TO ADJUST ACCORDING TO PROJECT SPECIFIC REQUIREMENTS.

B. THE DESIGN ENGINEER SHALL INCORPORATE ONLY THE NECESSARY STANDARD GUIDELINE DRAWINGS AND DETAILS INTO HIS PROJECT CONTRACT DOCUMENTATION PACKAGE, AND SHALL ADJUST PAGE NUMBERS AND CROSS REFERENCING ACCORDINGLY.

C. TRANSMITTER CABLE MUST BE THE SAME LENGTH REGARDLESS OF ITS LOCATION FROM TERMINAL/ JUNCTION BOX.

D. THE DESIGN ENGINEER SHALL CONSULT THE CITY OF HOUSTON DESIGN GUIDELINES MANUAL, THE ENGINEERING DESIGN MANUAL, AND THE MASTER SPECIFICATIONS FOR FURTHER INSTRUCTIONS AND INFORMATION PERTINENT TO THESE STANDARD DESIGN GUIDELINE DRAWINGS.

E. THE DESIGN ENGINEER SHALL REMOVE THESE NOTES, ALL REFERENCES TO THESE NOTES, AND ANY OTHER EXTRANEOUS INFORMATION FROM THE DESIGN GUIDELINE DRAWINGS. DESIGN ENGINEER SHALL PROVIDE ANY NOTES OR OTHER APPROPRIATE INFORMATION NECESSARY TO COMPLETE THE LIFT STATION DESIGN.

SUBMERSIBLE TRANSDUCER
WELL LEVEL GAUGING SYSTEM
INSTALLATION & DETAILS

PROJECT NO. R-000265-0XXX-X

TITLE CITY OF HOUSTON
DESIGN GUIDELINE DRAWINGS
FOR SUBMERSIBLE LIFT STATIONS

CITY OF HOUSTON
DEPARTMENT OF PUBLIC WORKS AND ENGINEERING
ENGINEERING AND CONSTRUCTION

DESIGN ENGINEER TO INCLUDE COH STANDARD TITLE BLOCK ON ALL DRAWINGS, SEE STANDARD TITLE BLOCK DETAIL ON SHEET Z0C0X

REV. NO.	DESCRIPTION	APP'D	DATE

SCALE: AS NOTED
SUBMITTED:
DATE:
SURVEY BY:
FIELD BOOK NO.
DESIGNED BY:
DRAWN BY:
SHEET NO. OF SHEETS
DWG. NO. Z0C01-0516

CADD DWG. FILE NO. : Z0C01.DWG

COHSTD.BDR

0 1 2 3 ORIGINAL SCALE IN INCHES FOR REDUCED PLANS

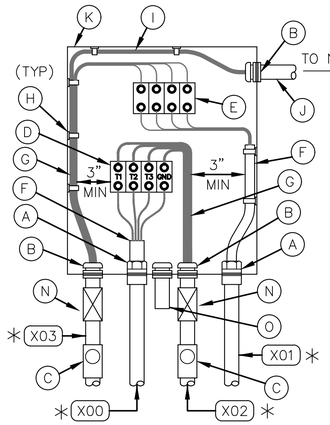

BEGINNING JUNCTION BOX
(SEE NOTE E)
DETAIL 3 Z0E02
(SEE NOTE 7)

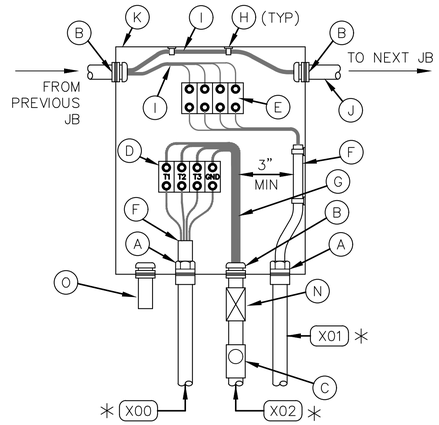

INTERMEDIATE JUNCTION BOX
(SEE NOTE E)
DETAIL 4 Z0E02
(SEE NOTE 7)

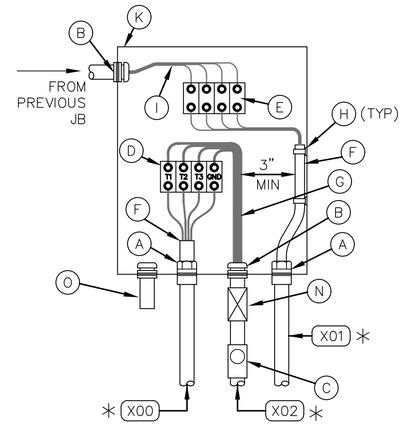

END JUNCTION BOX
(SEE NOTE E)
DETAIL 5 Z0E02
(SEE NOTE 7)

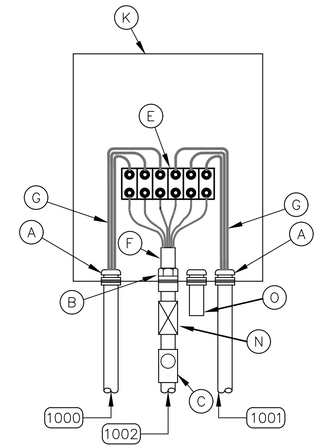

LEVEL TRANSMITTER JUNCTION BOX
(SEE NOTE E)
DETAIL 6 Z0E02
(SEE NOTE 7)

✱ REPLACE 'X' PER NOTATION SCHEDULE

NOTATION SCHEDULE

'X'	PUMP NO.
2	101
3	102
4	103

NOTES TO DESIGN ENGINEER:

A. THESE LIFT STATION DRAWINGS ARE CONSIDERED TO BE DESIGN GUIDELINES FOR THE CONSTRUCTION OF CITY OF HOUSTON WASTEWATER SUBMERSIBLE LIFT STATIONS. THEIR INTENDED USE IS AS A FRAMEWORK FOR THE CONTRACTED DESIGN ENGINEER IN DEVELOPING SPECIFIC LIFT STATION DESIGNS.

IT IS THE RESPONSIBILITY OF THE CONTRACTED DESIGN ENGINEER TO VERIFY THE COMPLETENESS AND ACCURACY OF THE INFORMATION HEREIN CONTAINED AND TO ADJUST ACCORDING TO PROJECT SPECIFIC REQUIREMENTS.

B. THE DESIGN ENGINEER SHALL INCORPORATE ONLY THE NECESSARY STANDARD GUIDELINE DRAWINGS AND DETAILS INTO HIS PROJECT CONTRACT DOCUMENTATION PACKAGE, AND SHALL ADJUST PAGE NUMBERS AND CROSS REFERENCING ACCORDINGLY.

C. TRANSMITTER CABLE MUST BE THE SAME LENGTH REGARDLESS OF ITS LOCATION FROM TERMINAL/ JUNCTION BOX.

D. THE DESIGN ENGINEER SHALL CONSULT THE CITY OF HOUSTON DESIGN GUIDELINES MANUAL, THE ENGINEERING DESIGN MANUAL, AND THE MASTER SPECIFICATIONS FOR FURTHER INSTRUCTIONS AND INFORMATION PERTINENT TO THESE STANDARD DESIGN GUIDELINE DRAWINGS.

E. FOR ALL TERMINAL/JUNCTION BOXES AROUND VALVE VAULTS AND WETWELLS SHOW EXPANSION AND LOOP. ENGINEERING DESIGN MANUAL, AND THE MASTER

F. THE DESIGN ENGINEER SHALL REMOVE THESE NOTES, ALL REFERENCES TO THESE NOTES, AND ANY OTHER EXTRANEOUS INFORMATION FROM THE DESIGN GUIDELINE DRAWINGS. DESIGN ENGINEER SHALL PROVIDE ANY NOTES OR OTHER APPROPRIATE INFORMATION NECESSARY TO COMPLETE THE LIFT STATION DESIGN.

NOTES:

1. NAMEPLATES SHALL BE MOUNTED TO JUNCTION BOXES USING 316 STAINLESS STEEL HARDWARE.
2. MAINTAIN MINIMUM SEPARATION REQUIRED UNDER NEC ARTICLE 504, BETWEEN INTRINSICALLY SAFE CONTROL WIRING AND NONINTRINSICALLY SAFE MOTOR FEEDER WIRING.
3. UNLESS OTHERWISE NOTED, ALL EXPOSED CONDUITS SHALL BE PVC COATED RIGID GALVANIZED STEEL.
4. UNLESS OTHERWISE NOTED, ALL NUTS, BOLTS, SCREWS WASHERS, ETC SHALL BE TYPE 316 STAINLESS STEEL.
5. ALL UNDERGROUND CONDUITS TO BE ENCASED IN REINFORCED CONCRETE DUCTBANK.
6. PROVIDE ANTI-CORROSIVE SPRAY ON ANY BARE METAL PARTS OR EXPOSED WIRE.
7. SEE WIRING SCHEMATICS FOR TERMINALS AND WIRE NUMBERS.
8. ANY CONDUIT REQUIRING A CSBE SEAL, SHALL BE A MINIMUM SIZE OF 2 1/2" PER CABLE.
9. DETAIL SHOWN MAY BE MODIFIED PER SITE SITUATION.

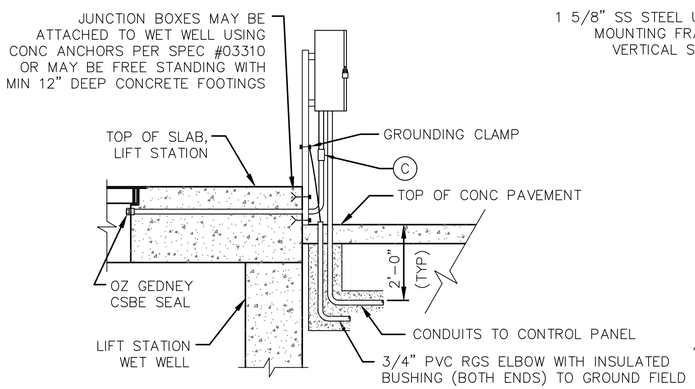

TYP SIDE VIEW FOR DETAIL 1, 1A & 2

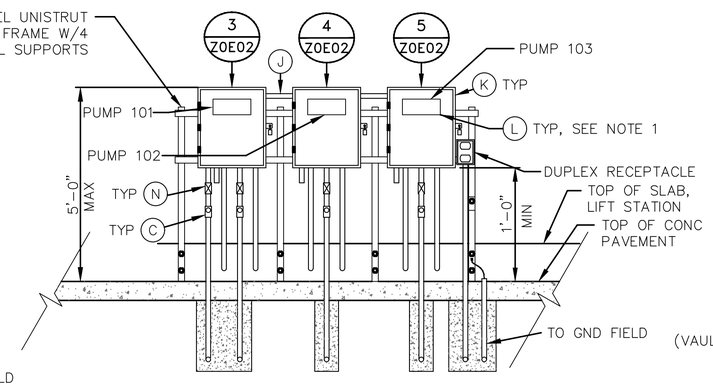

DETAIL 1 Z0E02
(SEE NOTE 9)

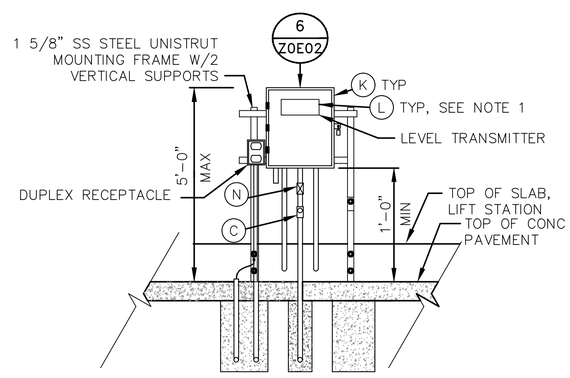

DETAIL 2 Z0E02
(SEE NOTE 9)

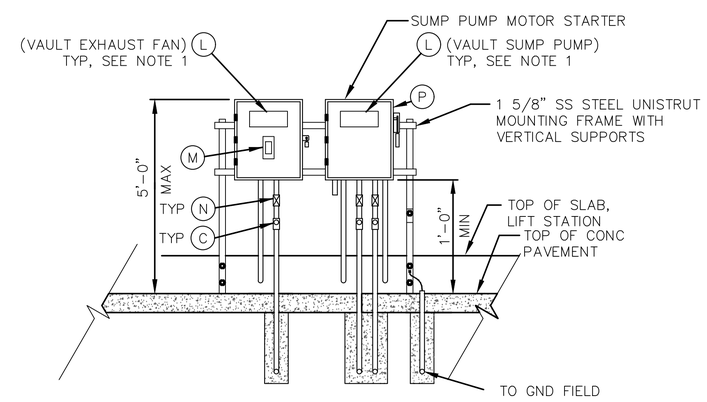

DETAIL 1A Z0E02

JUNCTION BOX EQUIPMENT SCHEDULE

A – OZ GEDNEY CSBE SEAL
B – WATERTIGHT CONDUIT HUB WITH INSULATED BUSHING
C – CLASS I, DIV 1, EXLOSION PROOF SEAL INSTALLED PER NEC DIV 501
D – POWER TERMINAL BLOCK W/SCREW DOWN BOX LUGS
E – CONTROL TERM BLOCK W/SCREW DOWN BOX LUGS
F – MULTI-CONDUCTOR CABLE, REMOVE OUTER JACKET AS SHOWN
G – WIRING AS SCHEDULED
H – WIRING HARNESS PERMANENTLY AFFIXED
I – PUMP CONTROL WIRING FROM PUMPS 2; 2 & 3; 4; OR D2, AS APPLICABLE
J – 1 1/2" PVC COATED CONDUIT NIPPLE
K – NEMA 4X STAINLESS STEEL JUNCTION BOX WITH GASKETED FRONT COVER, SINGLE QUARTER TURN, OIL-TIGHT LATCH AND PADLOCKING PROVISIONS, HOFFMAN D-3L16H1206 SS LF OR EQUAL. MINIMUM SIZE: 12"W X 16"H X 6"D
L – NAMEPLATE, SEE SPECIFICATIONES (SEE NAMEPLATE SCHEDULE)
M – MOTOR RATED SWITCH
N – EXPANSION FITTING
O – DRAIN VENT

REV. NO.	DESCRIPTION	APP'D	DATE

3 PUMP (INDOOR/OUTDOOR)
TYPICAL JUNCTION BOX DETAILS

PROJECT NO. R-000265-0XXX-X

TITLE CITY OF HOUSTON
DESIGN GUIDELINE DRAWINGS
FOR SUBMERSIBLE LIFT STATIONS

CITY OF HOUSTON
DEPARTMENT OF PUBLIC WORKS AND ENGINEERING
ENGINEERING AND CONSTRUCTION

DESIGN ENGINEER TO INCLUDE COH STANDARD TITLE BLOCK ON ALL DRAWINGS, SEE STANDARD TITLE BLOCK DETAIL ON SHEET Z0C0X

SCALE: NONE
DESIGNED BY:
DRAWN BY:
SUBMITTED:
DATE:
SURVEY BY:
FIELD BOOK NO.
SHEET NO. OF SHEETS
DWG. NO. Z0E02-0516

CADD DWG. FILE NO. : Z0E02.DWG

COHSTD.BDR

0 1 2 3 ORIGINAL SCALE IN INCHES FOR REDUCED PLANS

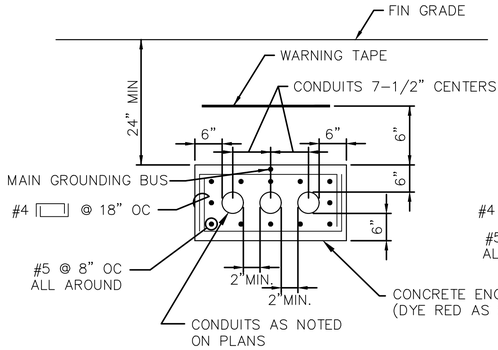

TYP MULTI-CONDUIT DUCTBANK SECTION

NOTE: TIE MAIN GROUNDING BUS TO REBAR AT A MAXIMUM INTERVAL OF EVERY 20 FEET.

DETAIL 7 / Z0E03

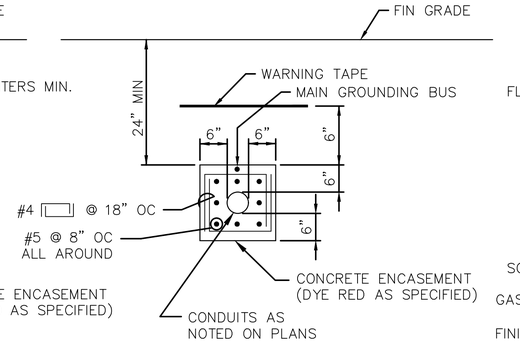

TYP SINGLE-CONDUIT DUCTBANK SECTION

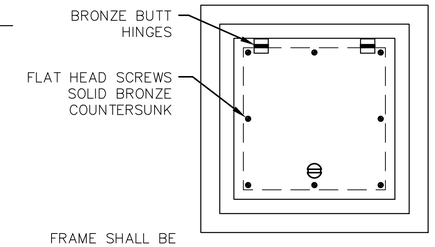

TOP PLAN

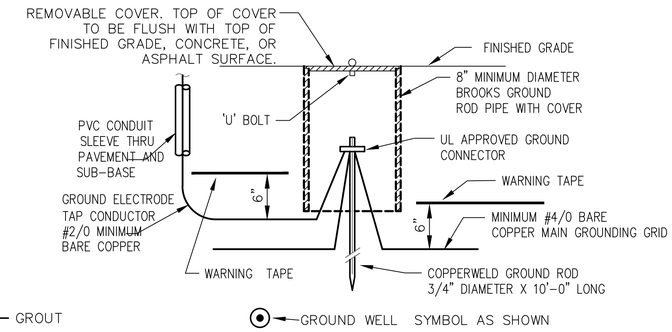

TYPICAL GROUND ROD AND WELL INSTALLATION

DETAIL 9 / Z0E03

NOT TO SCALE

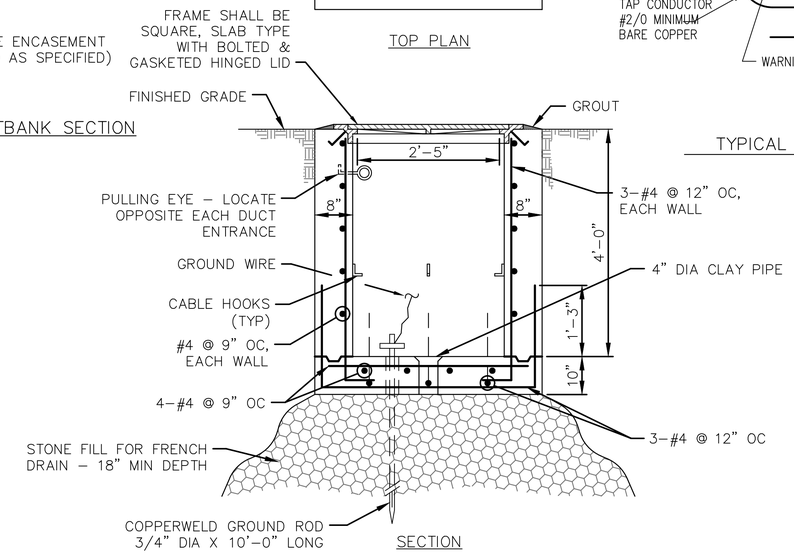

TYPICAL ELECTRICAL HANDHOLE CONSTRUCTION

DETAIL 8 / Z0E03

GROUND CONNECTOR SCHEDULE	
WIRE SIZE	BURNDY
#2 AWG	GAR 6426
#2/0 AWG	GAR 6426
#4/0 AWG	GAR 6429
500 kcmil	GAR 6434

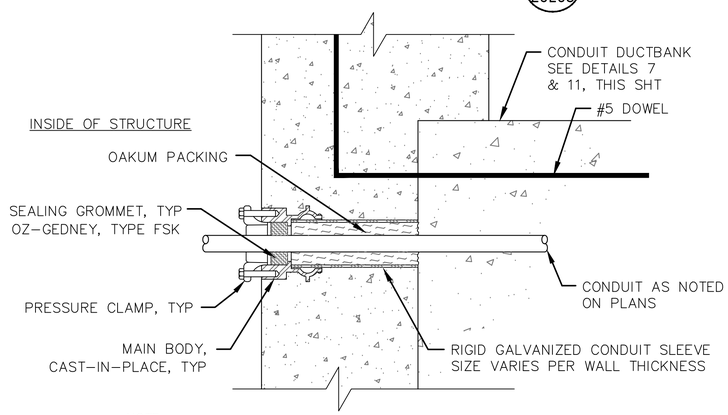

NOTE:

WALL SEAL SHOWN IS TYPICAL FOR EACH CONDUIT IN DUCTBANK.

SINGLE ENDED TYPE

FOR USE WHERE CONDUIT OUTSIDE THE STRUCTURE IS ENCASED IN CONCRETE

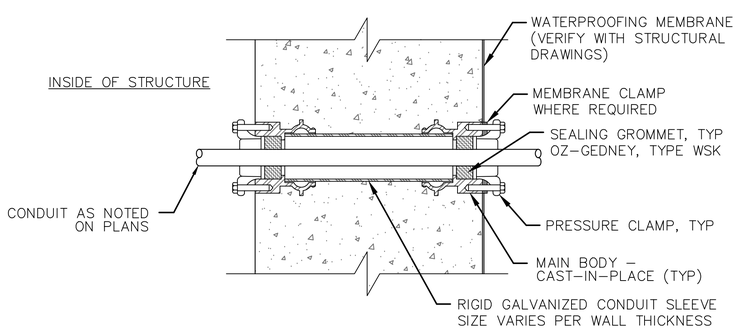

DOUBLE ENDED TYPE WITH MEMBRANE

FOR USE WHERE CONDUIT OUTSIDE THE STRUCTURE IS NOT ENCASED IN CONCRETE

TYPICAL CONDUIT SEALS

DETAIL 10 / Z0E03

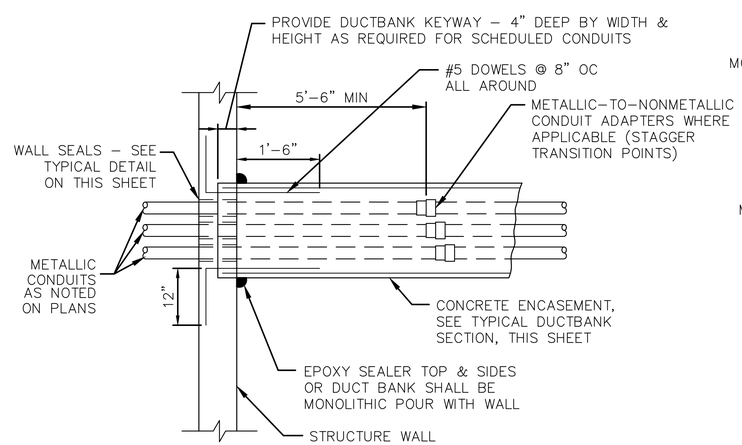

PLAN

TYP DUCTBANK ENTRANCE AT STRUCTURE WALL

DETAIL 11 / Z0E03

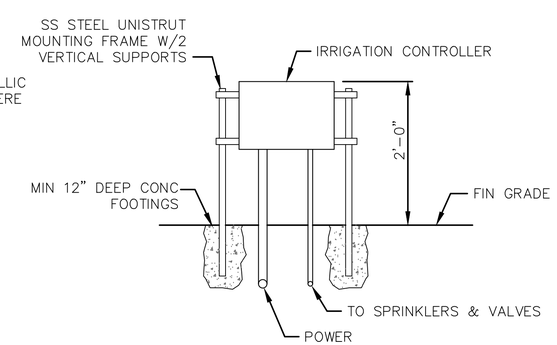

OUTDOOR IRRIGATION CONTROLLER DETAIL

DETAIL 12 / Z0E03

NOTES TO DESIGN ENGINEER:

A. THESE LIFT STATION DRAWINGS ARE CONSIDERED TO BE DESIGN GUIDELINES FOR THE CONSTRUCTION OF CITY OF HOUSTON WASTEWATER SUBMERSIBLE LIFT STATIONS. THEIR INTENDED USE IS AS A FRAMEWORK FOR THE CONTRACTED DESIGN ENGINEER IN DEVELOPING SPECIFIC LIFT STATION DESIGNS.

IT IS THE RESPONSIBILITY OF THE CONTRACTED DESIGN ENGINEER TO VERIFY THE COMPLETENESS AND ACCURACY OF THE INFORMATION HEREIN CONTAINED AND TO ADJUST ACCORDING TO PROJECT SPECIFIC REQUIREMENTS.

B. THE DESIGN ENGINEER SHALL INCORPORATE ONLY THE NECESSARY STANDARD GUIDELINE DRAWINGS AND DETAILS INTO HIS PROJECT CONTRACT DOCUMENTATION PACKAGE, AND SHALL ADJUST PAGE NUMBERS AND CROSS REFERENCING ACCORDINGLY.

C. THE DESIGN ENGINEER SHALL CONSULT THE CITY OF HOUSTON DESIGN GUIDELINES MANUAL, THE ENGINEERING DESIGN MANUAL, AND THE MASTER SPECIFICATIONS FOR FURTHER INSTRUCTIONS AND INFORMATION PERTINENT TO THESE STANDARD DESIGN GUIDELINE DRAWINGS.

D. THE DESIGN ENGINEER SHALL REMOVE THESE NOTES, ALL REFERENCES TO THESE NOTES, AND ANY OTHER EXTRANEOUS INFORMATION FROM THE DESIGN GUIDELINE DRAWINGS. DESIGN ENGINEER SHALL PROVIDE ANY NOTES OR OTHER APPROPRIATE INFORMATION NECESSARY TO COMPLETE THE LIFT STATION DESIGN.

3 PUMP (INDOOR/OUTDOOR)
TYPICAL ELECTRICAL DETAILS

PROJECT NO. R-000265-0XXX-X

TITLE CITY OF HOUSTON
DESIGN GUIDELINE DRAWINGS
FOR SUBMERSIBLE LIFT STATIONS

CITY OF HOUSTON
DEPARTMENT OF PUBLIC WORKS AND ENGINEERING
ENGINEERING AND CONSTRUCTION

DESIGN ENGINEER TO INCLUDE COH STANDARD TITLE BLOCK ON ALL DRAWINGS, SEE STANDARD TITLE BLOCK DETAIL ON SHEET Z0C0X

REV. NO.	DESCRIPTION	APP'D	DATE

SCALE: NONE
SUBMITTED:
DATE:
SURVEY BY:
FIELD BOOK NO.
DESIGNED BY:
DRAWN BY:
SHEET NO. OF SHEETS
DWG. NO. Z0E03-0516

CADD DWG. FILE NO. : Z0E03.DWG

COHSTD.BDR

0 1 2 3 ORIGINAL SCALE IN INCHES FOR REDUCED PLANS

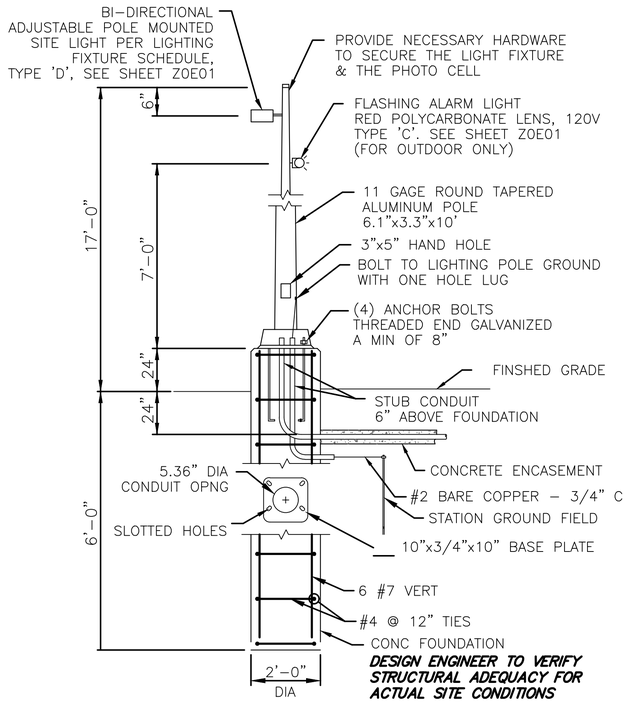

TYPICAL YARD LIGHT

DETAIL 13 / Z0E04

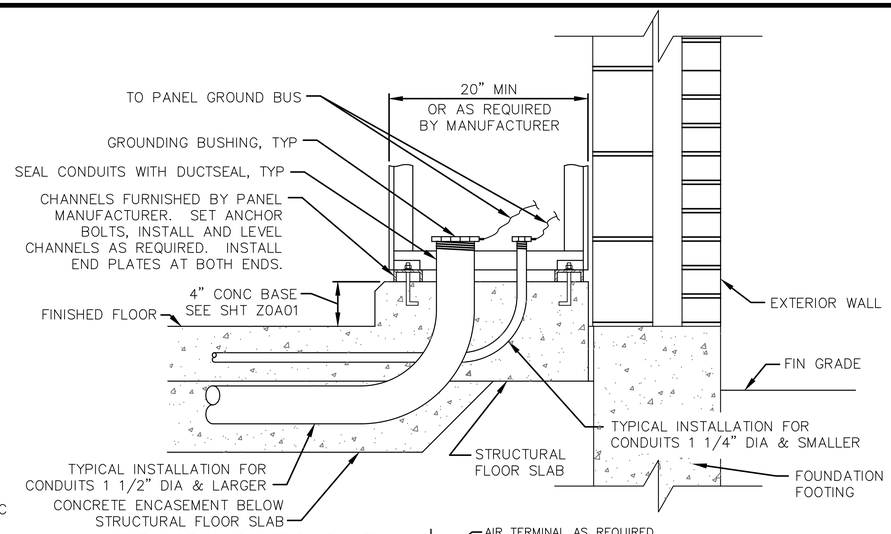

TYP MCC & CONTROL PANEL INSTALLATION & CONDUIT ENTRY

DETAIL 14 / Z0E04

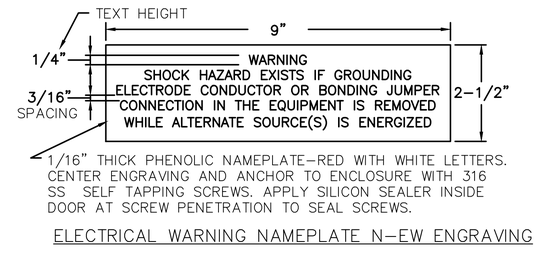

ELECTRICAL WARNING NAMEPLATE N–EW ENGRAVING

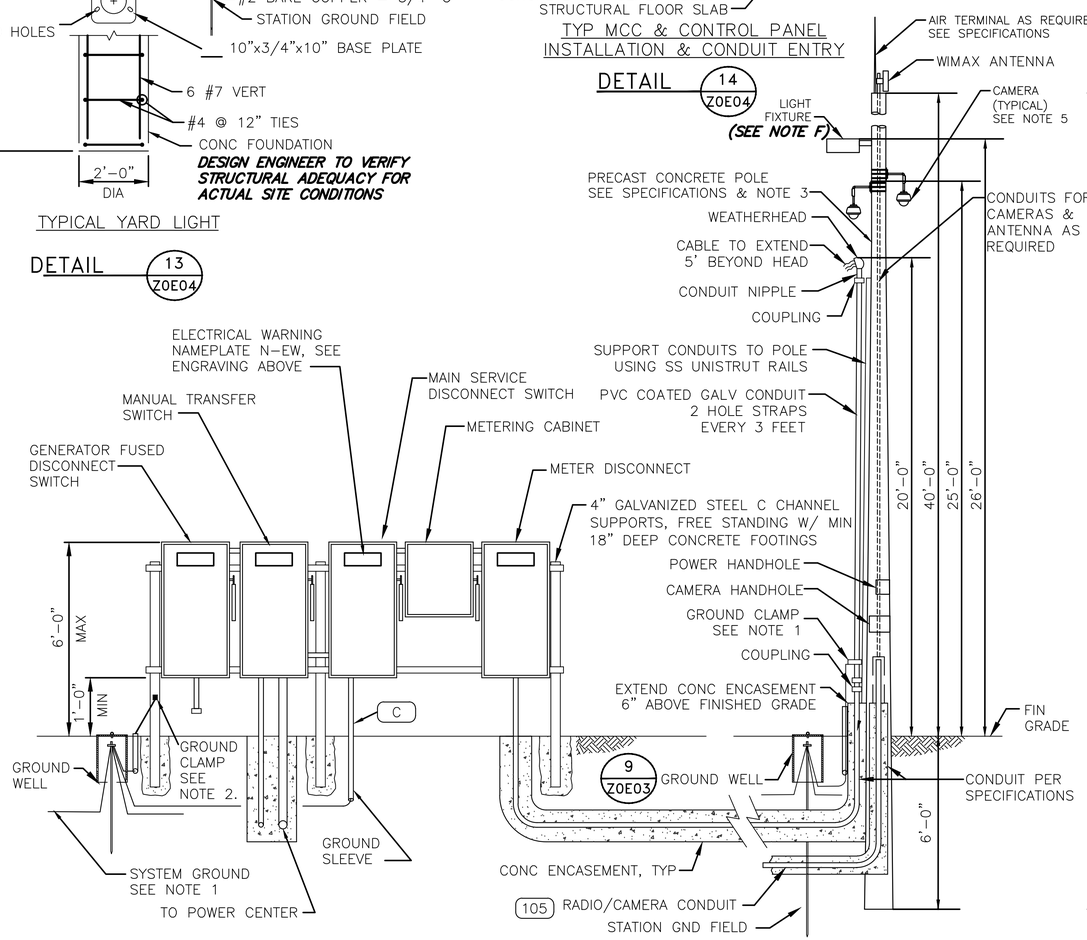

TYP ELECTRIC & COMMUNICATION SERVICE RACK MOUNTED DETAIL

(SEE NOTE B)

DETAIL 15 / Z0E04

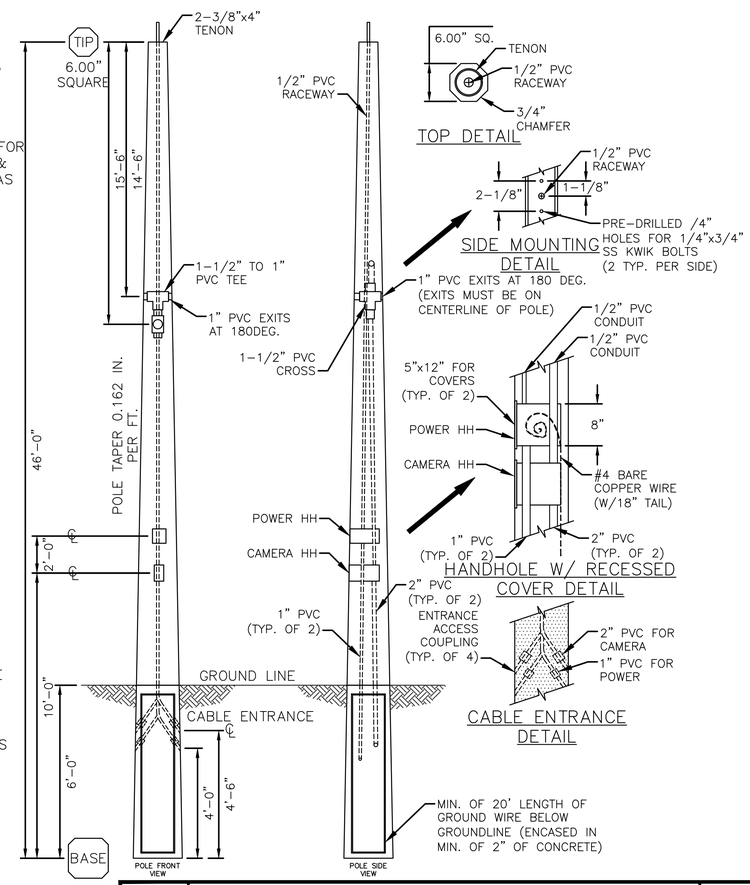

NOTES TO DESIGN ENGINEER:

A. THESE LIFT STATION DRAWINGS ARE CONSIDERED TO BE DESIGN GUIDELINES FOR THE CONSTRUCTION OF CITY OF HOUSTON WASTEWATER SUBMERSIBLE LIFT STATIONS. THEIR INTENDED USE IS AS A FRAMEWORK FOR THE CONTRACTED DESIGN ENGINEER IN DEVELOPING SPECIFIC LIFT STATION DESIGNS.

IT IS THE RESPONSIBILITY OF THE CONTRACTED DESIGN ENGINEER TO VERIFY THE COMPLETENESS AND ACCURACY OF THE INFORMATION HEREIN CONTAINED AND TO ADJUST ACCORDING TO PROJECT SPECIFIC REQUIREMENTS.

B. SERVICE SHOULD BE CONSTRUCTED ACCORDING TO UTILITY SERVICE STANDARDS BOOK. 200A, 3 PHASE, 480V AND ALL 400A AND ABOVE SERVICE SHOULD BE CONSTRUCTED USING THE STUB POLE AND UNISTRUT RACK ASSEMBLY DETAIL.

C. THE DESIGN ENGINEER SHALL INCORPORATE ONLY THE NECESSARY STANDARD GUIDELINE DRAWINGS AND DETAILS INTO HIS PROJECT CONTRACT DOCUMENTATION PACKAGE, AND SHALL ADJUST PAGE NUMBERS AND CROSS REFERENCING ACCORDINGLY.

D. THE DESIGN ENGINEER SHALL CONSULT THE CITY OF HOUSTON DESIGN GUIDELINES MANUAL, THE ENGINEERING DESIGN MANUAL, AND THE MASTER SPECIFICATIONS FOR FURTHER INSTRUCTIONS AND INFORMATION PERTINENT TO THESE STANDARD DESIGN GUIDELINE DRAWINGS.

E. THE DESIGN ENGINEER SHALL REMOVE THESE NOTES, ALL REFERENCES TO THESE NOTES, AND ANY OTHER EXTRANEOUS INFORMATION FROM THE DESIGN GUIDELINE DRAWINGS. DESIGN ENGINEER SHALL PROVIDE ANY NOTES OR OTHER APPROPRIATE INFORMATION NECESSARY TO COMPLETE THE LIFT STATION DESIGN.

F. THE DESIGN ENGINEER SHALL VERIFY THE APPLICATION FOR LIGHT FIXTURE WHERE NEEDED PER SITE PLAN AND USE POWER AND CONDUIT DETAILS.

NOTES:

1. DENOTES SYSTEM GROUNDING CONDUCTOR SHALL BE CONNECTED TO ALL GROUNDING ELECTRODE CONDUCTORS, GROUND MATS, GROUND LOOPS ETC.., TO FORM A COMMON GROUND PLANE.
2. ON GROUND WIRE TERMINATION'S, ALL PAINTED OR COATED METAL SURFACES SHALL BE REMOVED AND CLEANED TO BARE METAL, TO OBTAIN A SOUND GROUND CONNETION. ONCE INSTALLED APPLY PROTECTIVE COATING ON BARE METAL AREAS PER MANUFACTURER REQUIREMENTS.
3. PRECAST CONCRETE POLE TO MOUNT THE RADIO RECEIVER AND CAMERAS.
4. 1" CONDUIT TO EXTEND TO THE TOP OF POLE FOR FOR ETHERNET CABLES FOR RADIO AND CAMERAS.
5. CAMERA LOCATIONS AS SPECIFIED PER WASTEWATER INSTRUCTIONS.

3 PUMP (INDOOR/OUTDOOR)
TYPICAL ELECTRICAL DETAILS

PROJECT NO. R-000265-0XXX-X

TITLE CITY OF HOUSTON
DESIGN GUIDELINE DRAWINGS
FOR SUBMERSIBLE LIFT STATIONS

CITY OF HOUSTON
DEPARTMENT OF PUBLIC WORKS AND ENGINEERING
ENGINEERING AND CONSTRUCTION

DESIGN ENGINEER TO INCLUDE COH STANDARD TITLE BLOCK ON ALL DRAWINGS, SEE STANDARD TITLE BLOCK DETAIL ON SHEET Z0C0X

REV. NO.	DESCRIPTION	APP'D	DATE

SCALE: NONE
SUBMITTED:
DATE:
SURVEY BY:
FIELD BOOK NO.
DESIGNED BY:
DRAWN BY:
SHEET NO. OF SHEETS
DWG. NO. Z0E04-0516

CADD DWG. FILE NO. : Z0E04.DWG

COHSTD.BDR

0 1 2 3 ORIGINAL SCALE IN INCHES FOR REDUCED PLANS

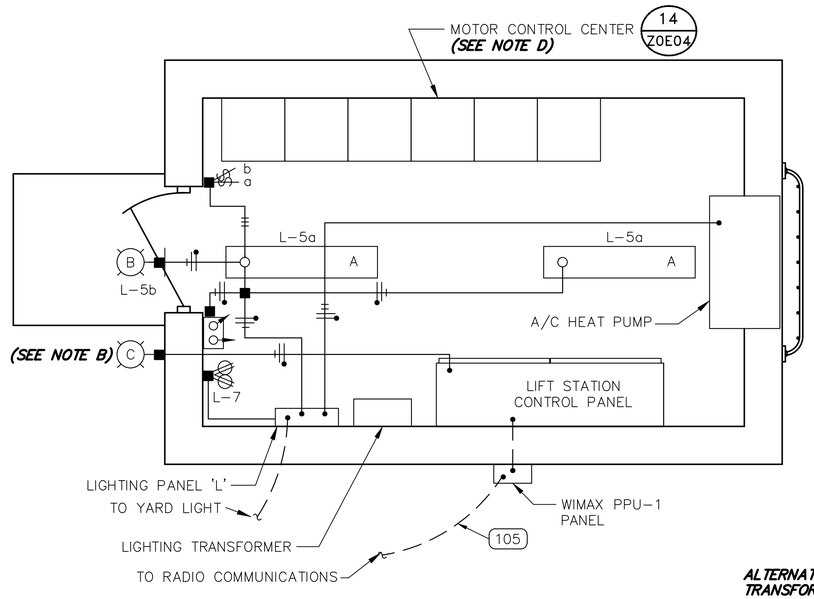

LIGHTING & WIMAX SYSTEM PLAN

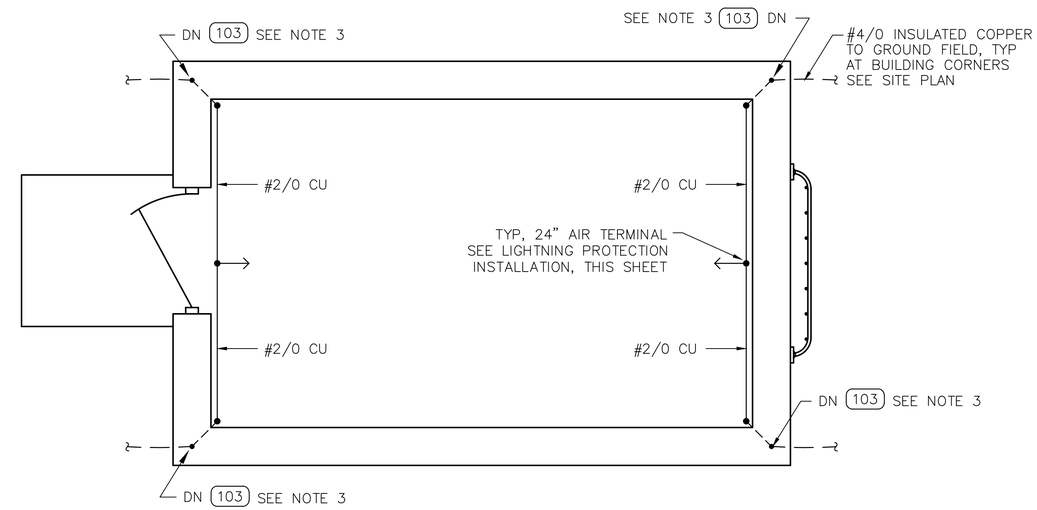

LIGHTNING PROTECTION PLAN

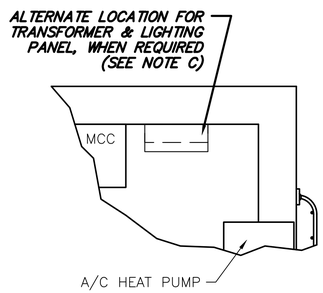

VIEW A

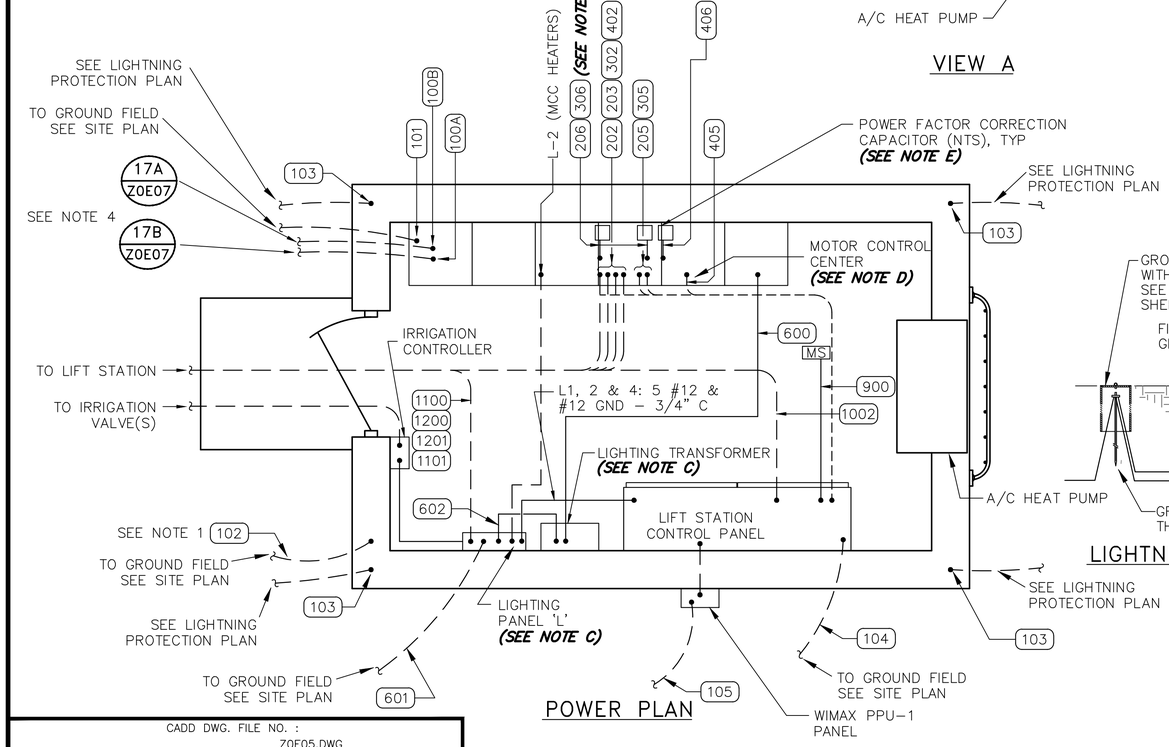

POWER PLAN

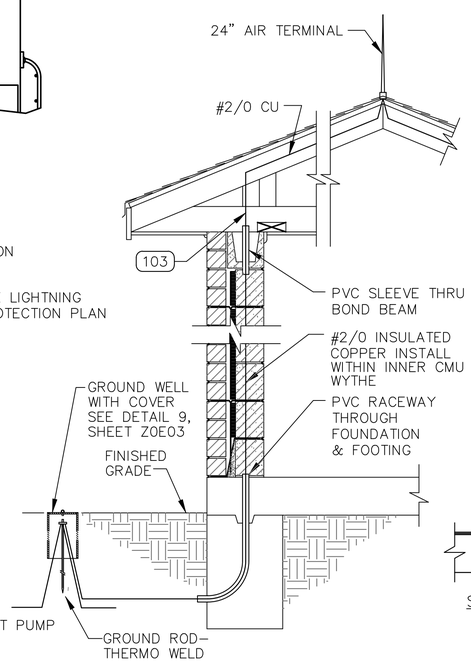

LIGHTNING PROTECTION INSTALLATION

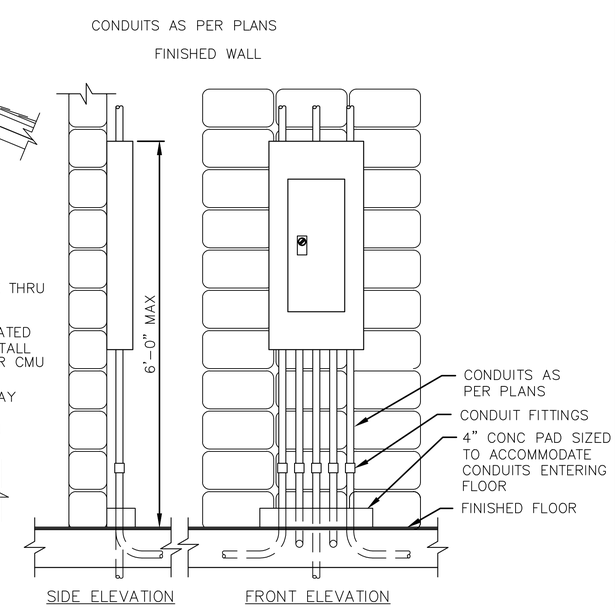

TYPICAL PANEL INSTALLATION

DETAIL 1 Z0E05

NOTES TO DESIGN ENGINEER:

A. THESE LIFT STATION DRAWINGS ARE CONSIDERED TO BE DESIGN GUIDELINES FOR THE CONSTRUCTION OF CITY OF HOUSTON WASTEWATER SUBMERSIBLE LIFT STATIONS. THEIR INTENDED USE IS AS A FRAMEWORK FOR THE CONTRACTED DESIGN ENGINEER IN DEVELOPING SPECIFIC LIFT STATION DESIGNS.

IT IS THE RESPONSIBILITY OF THE CONTRACTED DESIGN ENGINEER TO VERIFY THE COMPLETENESS AND ACCURACY OF THE INFORMATION HEREIN CONTAINED AND TO ADJUST ACCORDING TO PROJECT SPECIFIC REQUIREMENTS.

B. STEM MOUNT ALARM LIGHT 1'-6" BELOW LEAVE LINE.

C. THE TRANSFORMER AND LIGHTING PANEL IS MOUNTED ADJACENT TO THE CONTROL PANEL PER VIEW A.

D. MOTOR CONTROL CENTER FOOTPRINT IS SHOWN FOR THE MAXIMUM MCC LINEUP LENGTH ANTICIPATED. INDIVIDUAL LIFT STATION CONTROL BUILDING SHALL BE ADJUSTED BASED ON THE ACTUAL FOOTPRINT USED AND THE CONDUITS REQUIRED. SEE DEVICE SCHEDULES AND CONTROL BUILDING ARCHITECTURAL DRAWING FOR ADDITIONAL INFORMATION.

E. POWER FACTOR CORRECTION CAPACITOR IS REQUIRED FOR ALL PUMPS RATED AT 20 HP OR GREATER. CONDUIT NUMBERS 206, 306, 406. ARE USED WHEN POWER FACTOR CORRECTION CAPACITOR IS REQUIRED.

F. THE DESIGN ENGINEER SHALL INCORPORATE ONLY THE NECESSARY STANDARD GUIDELINE DRAWINGS AND DETAILS INTO HIS PROJECT CONTRACT DOCUMENTATION PACKAGE, AND SHALL ADJUST PAGE NUMBERS AND CROSS REFERENCING ACCORDINGLY.

G. THE DESIGN ENGINEER SHALL CONSULT THE CITY OF HOUSTON DESIGN GUIDELINES MANUAL, THE ENGINEERING DESIGN MANUAL, AND THE MASTER SPECIFICATIONS FOR FURTHER INSTRUCTIONS AND INFORMATION PERTINENT TO THESE STANDARD DESIGN GUIDELINE DRAWINGS.

H. THE DESIGN ENGINEER SHALL REMOVE THESE NOTES, ALL REFERENCES TO THESE NOTES, AND ANY OTHER EXTRANEOUS INFORMATION FROM THE DESIGN GUIDELINE DRAWINGS. DESIGN ENGINEER SHALL PROVIDE ANY NOTES OR OTHER APPROPRIATE INFORMATION NECESSARY TO COMPLETE THE LIFT STATION DESIGN.

NOTES:

1. THERMO WELD BUILDING GROUND CONDUCTOR TO BUILDING REINFORCING STEEL.
2. ALL CONDUITS DESIGNATED AS UP ARE CONTINUED ON THE ROOF PLAN. ALL CONDUITS DESIGNATED AS DOWN (DN) ARE CONTINUED ON THE FLOOR PLAN.
3. INSTALL LIGHTNING DOWN LEADS WITHIN MASONRY BLOCK WALL. PROVIDE PVC SLEEVE AND ELBOW THROUGH SLAB AND FOUNDATION. SEE LIGHTNING PROTECTION INSTALLATION DETAIL, THIS SHEET.
4. 17A IS REFERRED TO OUTDOOR MTS.
   17B IS REFERRED TO INDOOR MTS.

3 PUMP (INDOOR/OUTDOOR)
CONTROL BUILDING - ELECTRICAL

PROJECT NO. R-000265-0XXX-X

TITLE CITY OF HOUSTON
DESIGN GUIDELINE DRAWINGS
FOR SUBMERSIBLE LIFT STATIONS

CITY OF HOUSTON
DEPARTMENT OF PUBLIC WORKS AND ENGINEERING
ENGINEERING AND CONSTRUCTION

DESIGN ENGINEER TO INCLUDE COH STANDARD TITLE BLOCK ON ALL DRAWINGS, SEE STANDARD TITLE BLOCK DETAIL ON SHEET Z0C0X

REV. NO.	DESCRIPTION	APP'D	DATE

SCALE: 1/2" = 1'-0"
DESIGNED BY:
DRAWN BY:
SUBMITTED:
DATE:
SURVEY BY:
FIELD BOOK NO.
SHEET NO. OF SHEETS
DWG. NO. Z0E05-0516

CADD DWG. FILE NO. : Z0E05.DWG

COHSTD.BDR

0 1 2 3 ORIGINAL SCALE IN INCHES FOR REDUCED PLANS

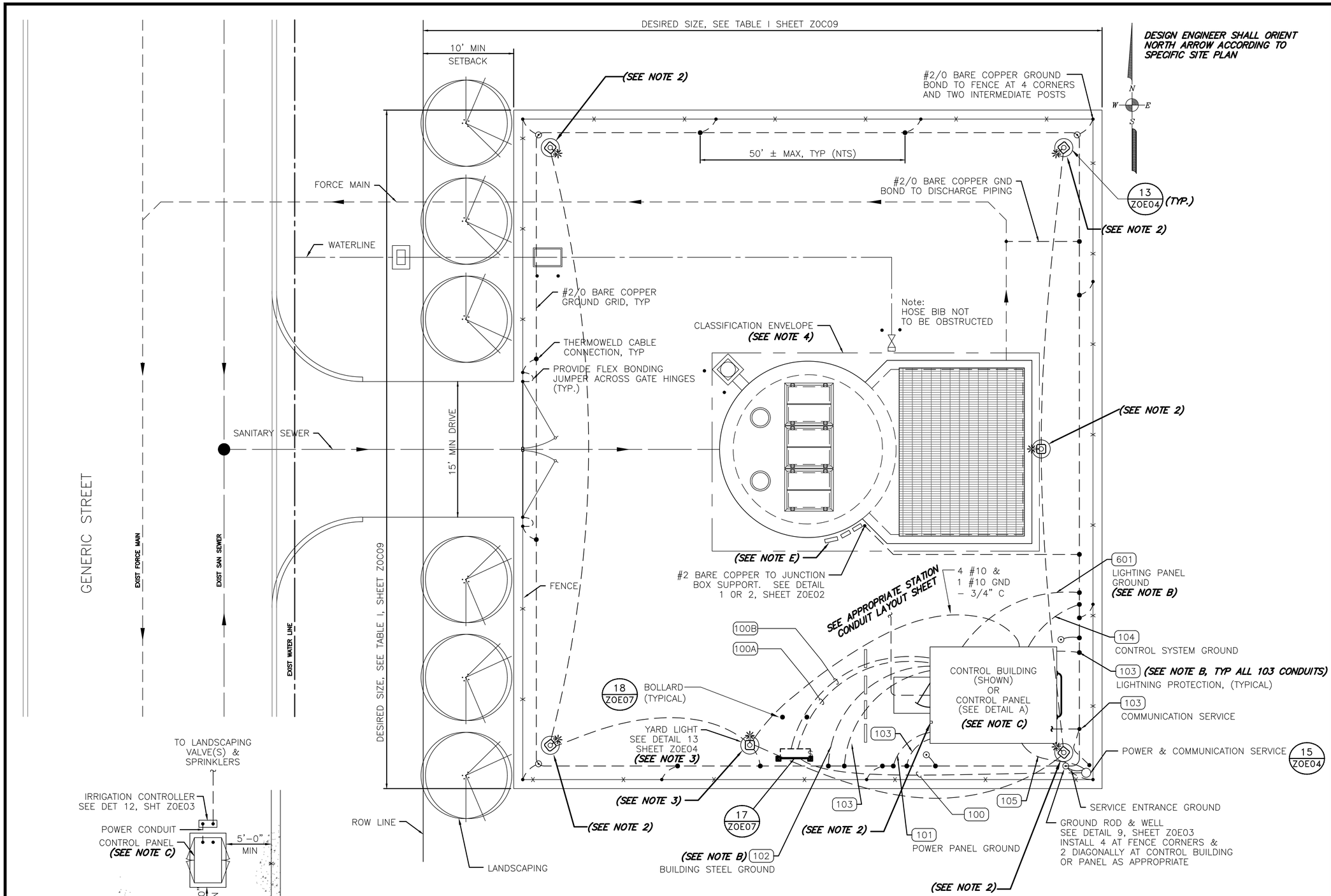

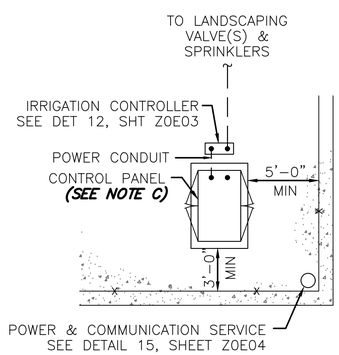

DETAIL A

THIS DRAWING IS AN EXAMPLE ONLY AND IS NOT TO BE INCLUDED IN A PROJECT DRAWING PACKAGE SITE PLAN TO BE UNIQUE FOR EACH LIFT STATION

NOTES TO DESIGN ENGINEER:

A. THESE LIFT STATION DRAWINGS ARE CONSIDERED TO BE DESIGN GUIDELINES FOR THE CONSTRUCTION OF CITY OF HOUSTON WASTEWATER SUBMERSIBLE LIFT STATIONS. THEIR INTENDED USE IS AS A FRAMEWORK FOR THE CONTRACTED DESIGN ENGINEER IN DEVELOPING SPECIFIC LIFT STATION DESIGNS.

IT IS THE RESPONSIBILITY OF THE CONTRACTED DESIGN ENGINEER TO VERIFY THE COMPLETENESS AND ACCURACY OF THE INFORMATION HEREIN CONTAINED AND TO ADJUST ACCORDING TO PROJECT SPECIFIC REQUIREMENTS.

B. CONDUITS NOTED ARE NOT USED FOR SITES WHERE AN OUTDOOR CONTROL PANEL IS USED.

C. LOCATE THE CONTROL BUILDING OR PANEL IN THE SOUTH-EAST CORNER OF THE STATION SITE, WHERE POSSILE. MAINTAIN CLEARANCES AROUND CONTROL PANEL AND OTHER ELECTRICAL EQUIPMENT IN ACCORDANCE WITH NEC 93 (110-16).

D. SEE TYPICAL CIVIL SITE PLAN (SHEET Z0C09) FOR ADDITIONAL INFORMATION.

E. LOCATE ELECTRICAL JUNCTION BOXES AWAY FROM WET WELL VENT IN A SOUTHEASTERLY DIRECTION. POSITION JUNCTION BOXES TO AVOID CONFLICT WITH HOIST FOR PUMP REMOVAL.

F. THE DESIGN ENGINEER SHALL INCORPORATE ONLY THE NECESSARY STANDARD GUIDELINE DRAWINGS AND DETAILS INTO HIS PROJECT CONTRACT DOCUMENTATION PACKAGE, AND SHALL ADJUST PAGE NUMBERS AND CROSS REFERENCING ACCORDINGLY.

G. THE DESIGN ENGINEER SHALL CONSULT THE CITY OF HOUSTON DESIGN GUIDELINES MANUAL, THE ENGINEERING DESIGN MANUAL, AND THE MASTER SPECIFICATIONS FOR FURTHER INSTRUCTIONS AND INFORMATION PERTINENT TO THESE STANDARD DESIGN GUIDELINE DRAWINGS.

H. THE DESIGN ENGINEER SHALL REMOVE THESE NOTES, ALL REFERENCES TO THESE NOTES, AND ANY OTHER EXTRANEOUS INFORMATION FROM THE DESIGN GUIDELINE DRAWINGS. DESIGN ENGINEER SHALL PROVIDE ANY NOTES OR OTHER APPROPRIATE INFORMATION NECESSARY TO COMPLETE THE LIFT STATION DESIGN.

NOTES:

1. THE ELECTRICAL INSTALLATION IN THE WET WELL SHALL BE EXPLOSION PROOF, IN ACCORDANCE WITH THE NATIONAL ELECTRICAL CODE FOR CLASS I, DIVISION 1. LOCATIONS
2. MANUAL SWITCH INSIDE CONTROL ROOM SHALL OPERATE PERIMETER LIGHT.
3. LIGHT FIXTURE AT SERVICE INSTALLATION SHALL OPERATE VIA DUSK-TO-DAWN PHOTOCELL CONTROL.
4. INSIDE WETWELL RATED NEMA CLASS 1, DIV. 1. OUSIDE ABOVE GROUND, AROUND WETWELL RATED CLASS 1, DIV. 2 ACCORDING TO NFPA 820.

– EXAMPLE –
ELECTRICAL SITE PLAN
ALTERNATE HIGH PROFILE CONFIGURATION

PROJECT NO. R-000265-0XXX-X

TITLE CITY OF HOUSTON DESIGN GUIDELINE DRAWINGS FOR SUBMERSIBLE LIFT STATIONS

CITY OF HOUSTON
DEPARTMENT OF PUBLIC WORKS AND ENGINEERING
ENGINEERING AND CONSTRUCTION

DESIGN ENGINEER TO INCLUDE COH STANDARD TITLE BLOCK ON ALL DRAWINGS, SEE STANDARD TITLE BLOCK DETAIL ON SHEET Z0C0X

REV. NO.	DESCRIPTION	APP'D	DATE

SCALE: 3/16" = 1'-0"
SUBMITTED:
DATE:
SURVEY BY:
FIELD BOOK NO.
DESIGNED BY:
DRAWN BY:
SHEET NO. OF SHEETS
DWG. NO. Z0E06-0516

CADD DWG. FILE NO. : Z0E06.DWG

COHSTD.BDR

0 1 2 3 ORIGINAL SCALE IN INCHES FOR REDUCED PLANS

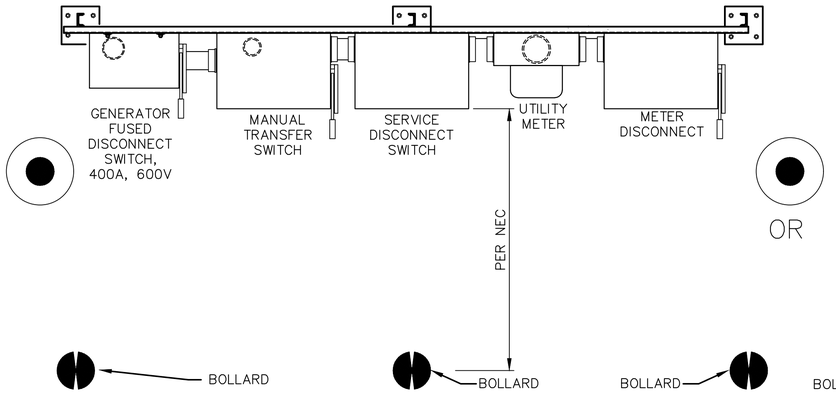

OR

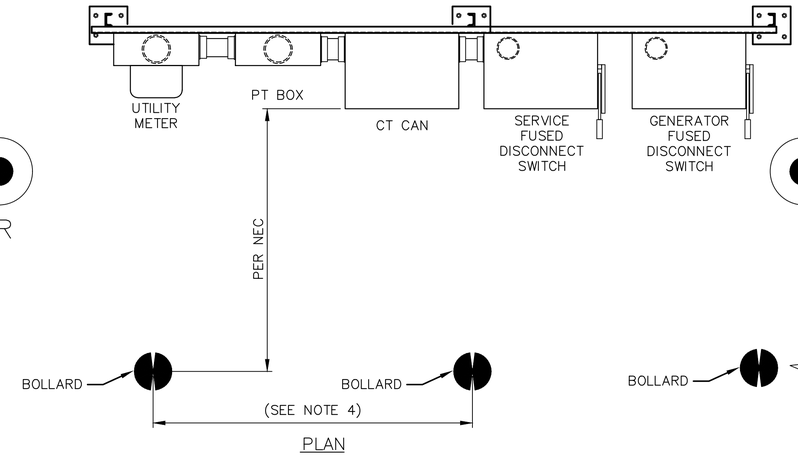

PLAN

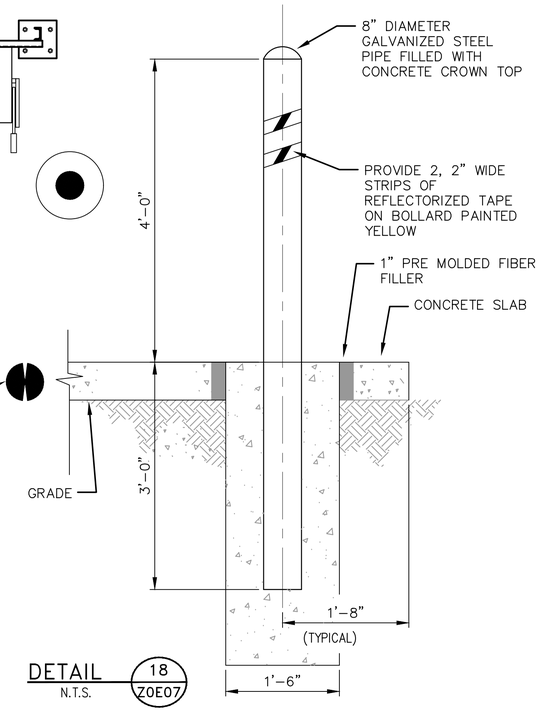

DETAIL 18 / Z0E07
N.T.S.

BOLLARD DETAIL

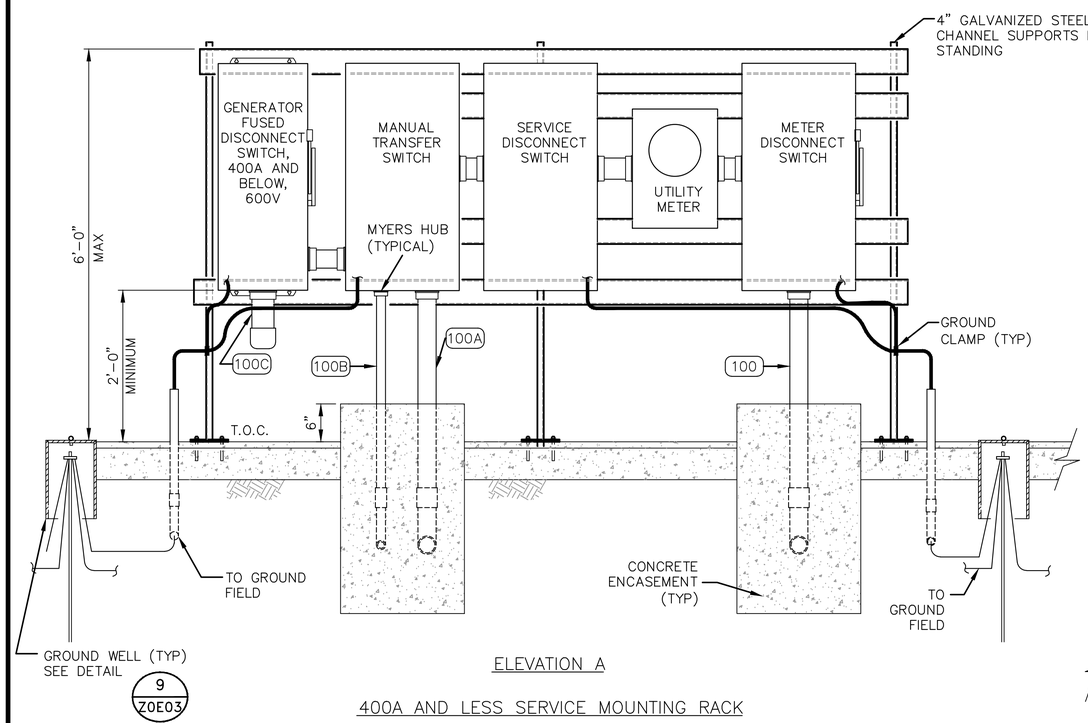

ELEVATION A

400A AND LESS SERVICE MOUNTING RACK

DETAIL 17 / Z0E07

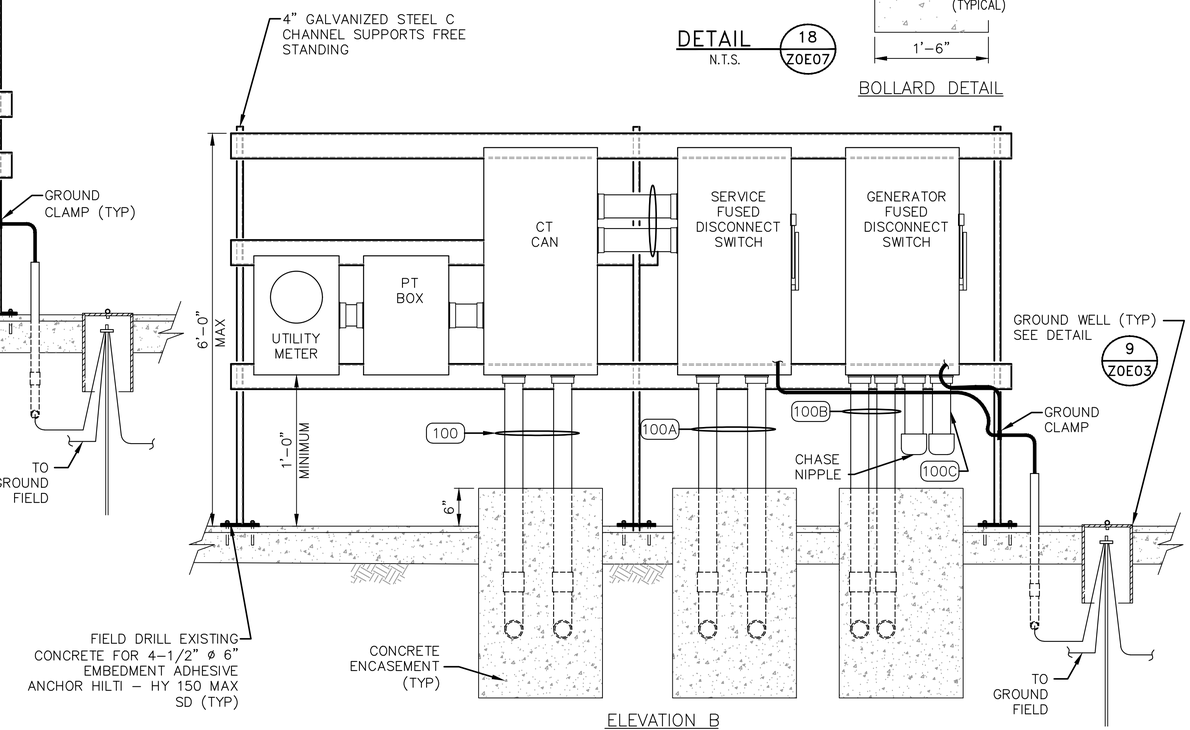

ELEVATION B

500A AND GREATER SERVICE MOUNTING RACK

NOTES TO DESIGN ENGINEER:

A. THESE LIFT STATION DRAWINGS ARE CONSIDERED TO BE DESIGN GUIDELINES FOR THE CONSTRUCTION OF CITY OF HOUSTON WASTEWATER SUBMERSIBLE LIFT STATIONS. THEIR INTENDED USE IS AS A FRAMEWORK FOR THE CONTRACTED DESIGN ENGINEER IN DEVELOPING SPECIFIC LIFT STATION DESIGNS.

IT IS THE RESPONSIBILITY OF THE CONTRACTED DESIGN ENGINEER TO VERIFY THE COMPLETENESS AND ACCURACY OF THE INFORMATION HEREIN CONTAINED AND TO ADJUST ACCORDING TO PROJECT SPECIFIC REQUIREMENTS.

B. DESIGN ENGINEER TO PROVIDE NOT LESS THAN 1'-0" FROM TOP OF FINISHED GRADE TO TOP OF CONCRETE PEDESTAL. FINAL DIMENSION SHALL LOCATE TOP OF CONCRETE PEDESTAL AT NOT LESS THAN 1'-0" ABOVE 100 YEAR FLOOD PLAIN ELEVATION. WHEN THE TOP OF THE CONCRETE PEDESTAL IS GREATER THAN 1'-0" ABOVE FINISHED GRADE, THE DESIGN ENGINEER SHALL PROVIDE A WORK PLATFORM.

C. SERVICE SHOULD BE CONSTRUCTED ACCORDING TO UTILITY SERVICE STANDARDS BOOK. 200A, 3 PHASE, 480V AND ALL 400A AND ABOVE SERVICE SHOULD BE CONSTRUCTED USING THE STUB POLE AND UNISTRUT RACK ASSEMBLY DETAIL.

D. THE DESIGN ENGINEER SHALL INCORPORATE ONLY THE NECESSARY STANDARD GUIDELINE DRAWINGS AND DETAILS INTO HIS PROJECT CONTRACT DOCUMENTATION PACKAGE, AND SHALL ADJUST PAGE NUMBERS AND CROSS REFERENCING ACCORDINGLY.

E. THE DESIGN ENGINEER SHALL CONSULT THE CITY OF HOUSTON DESIGN GUIDELINES MANUAL, THE ENGINEERING DESIGN MANUAL, AND THE MASTER SPECIFICATIONS FOR FURTHER INSTRUCTIONS AND INFORMATION PERTINENT TO THESE STANDARD DESIGN GUIDELINE DRAWINGS.

F. THE DESIGN ENGINEER SHALL REMOVE THESE NOTES, ALL REFERENCES TO THESE NOTES, AND ANY OTHER EXTRANEOUS INFORMATION FROM THE DESIGN GUIDELINE DRAWINGS. DESIGN ENGINEER SHALL PROVIDE ANY NOTES OR OTHER APPROPRIATE INFORMATION NECESSARY TO COMPLETE THE LIFT STATION DESIGN.

NOTES:

1. CHASE NIPPLE(S) WITH REMOVABLE CAP(S) FOR CONNECTION OF PORTABLE GENERATOR. NOTE: CAP(S) TO BE ATTACHED TO PANEL OR CONDUIT(S) BY STAINLESS STEEL CHAIN.
2. T.O.C DEFINED AS TOP OF PAVEMENT OR TOP OF PANEL ENCLOSURE PEDESTAL WHICHEVER IS HIGHER. (SEE NOTE B)
3. CONTRACTOR SHALL COIL A MINIMUM OF 2 FT. AND TAPE THE END OF THE CONDUCTOR.
4. PROVIDE CENTER BOLLARD WHEN SPACE BETWEEN OUTSIDE BOLLARDS IS GREATER THEN 4'-0".

3 PUMP (INDOOR/OUTDOOR)
TYPICAL ELECTRICAL DETAILS

PROJECT NO. R-000265-0XXX-X

TITLE CITY OF HOUSTON
DESIGN GUIDELINE DRAWINGS
FOR SUBMERSIBLE LIFT STATIONS

CITY OF HOUSTON
DEPARTMENT OF PUBLIC WORKS AND ENGINEERING
ENGINEERING AND CONSTRUCTION

DESIGN ENGINEER TO INCLUDE COH STANDARD TITLE BLOCK ON ALL DRAWINGS, SEE STANDARD TITLE BLOCK DETAIL ON SHEET Z0C0X

REV. NO.	DESCRIPTION	APP'D	DATE

SCALE: NONE
DESIGNED BY:
DRAWN BY:
SUBMITTED:
DATE:
SURVEY BY:
FIELD BOOK NO.
SHEET NO. OF SHEETS
DWG. NO. Z0E07-0516

CADD DWG. FILE NO. : Z0E07.DWG

COHSTD.BDR

0 1 2 3 ORIGINAL SCALE IN INCHES FOR REDUCED PLANS

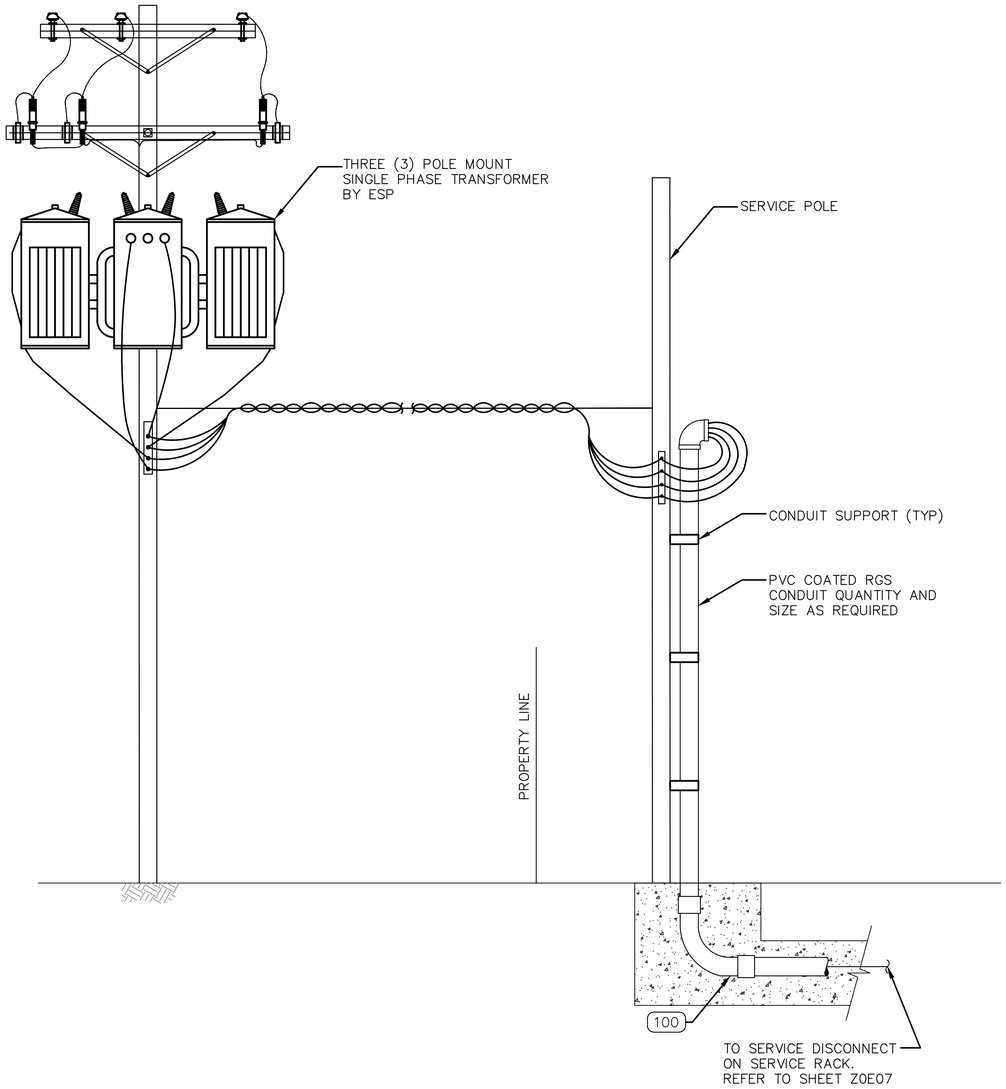

TYPICAL ELECTRICAL SERVICE ENTRANCE

FOR POWER SUPPLY BELOW 500KVA

DETAIL 19 / Z0E08

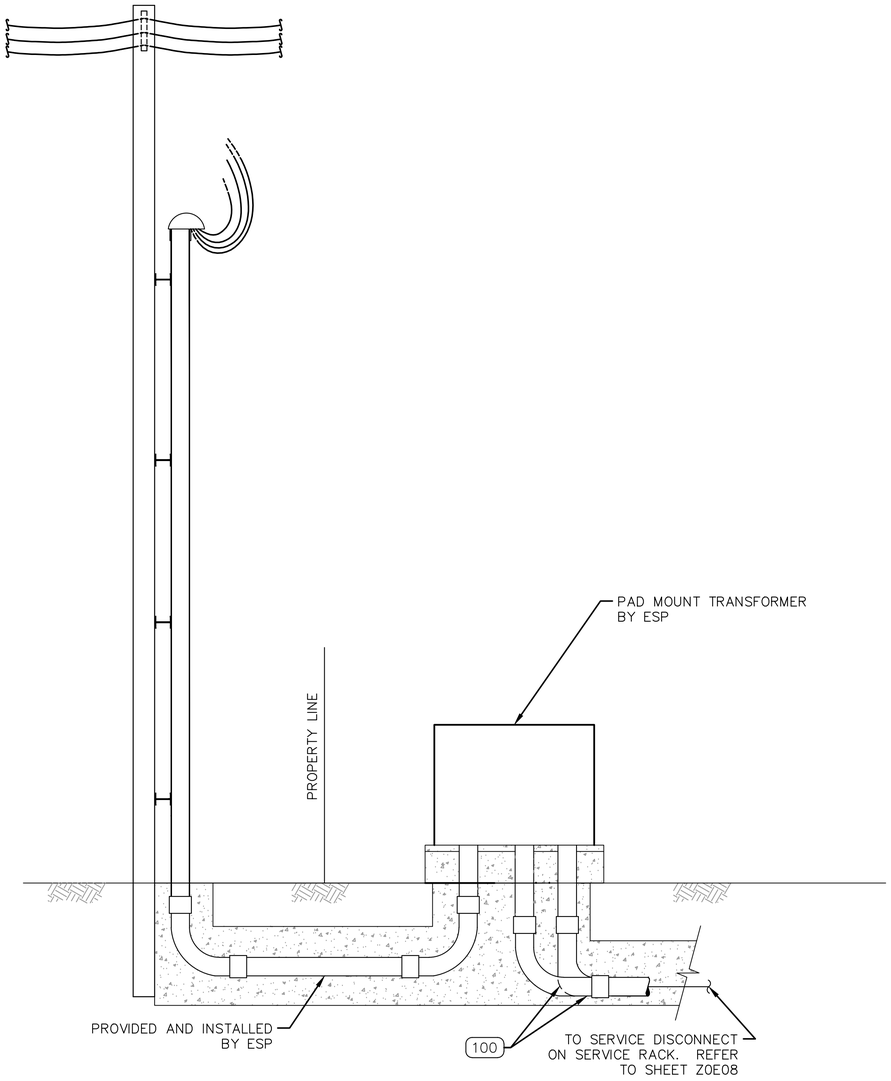

TYPICAL ELECTRICAL SERVICE ENTRANCE

FOR POWER SUPPLY 500KVA AND GREATER

DETAIL 20 / Z0E08

NOTES TO DESIGN ENGINEER:

A. THESE LIFT STATION DRAWINGS ARE CONSIDERED TO BE DESIGN GUIDELINES FOR THE CONSTRUCTION OF CITY OF HOUSTON WASTEWATER SUBMERSIBLE LIFT STATIONS. THEIR INTENDED USE IS AS A FRAMEWORK FOR THE CONTRACTED DESIGN ENGINEER IN DEVELOPING SPECIFIC LIFT STATION DESIGNS.

IT IS THE RESPONSIBILITY OF THE CONTRACTED DESIGN ENGINEER TO VERIFY THE COMPLETENESS AND ACCURACY OF THE INFORMATION HEREIN CONTAINED AND TO ADJUST ACCORDING TO PROJECT SPECIFIC REQUIREMENTS.

B. THE DESIGN ENGINEER SHALL CONSULT THE CITY OF HOUSTON DESIGN GUIDELINES MANUAL, THE ENGINEERING DESIGN MANUAL, AND THE MASTER SPECIFICATIONS FOR FURTHER INSTRUCTIONS AND INFORMATION PERTINENT TO THESE STANDARD DESIGN GUIDELINE DRAWINGS.

C. THE DESIGN ENGINEER SHALL CONSULT THE SERVICE STANDARD OF ELECTRICAL SERVICE PROVIDER (ESP). PRIOR TO DESIGNING SERVICE ENTRANCE.

NOTES:

3 PUMP (INDOOR/OUTDOOR)
TYPICAL ELECTRICAL DETAILS

PROJECT NO. R-000265-0XXX-X

TITLE CITY OF HOUSTON
DESIGN GUIDELINE DRAWINGS
FOR SUBMERSIBLE LIFT STATIONS

CITY OF HOUSTON
DEPARTMENT OF PUBLIC WORKS AND ENGINEERING
ENGINEERING AND CONSTRUCTION

DESIGN ENGINEER TO INCLUDE COH STANDARD TITLE BLOCK ON ALL DRAWINGS, SEE STANDARD TITLE BLOCK DETAIL ON SHEET Z0C0X

REV. NO.	DESCRIPTION	APP'D	DATE

SCALE: NONE
SUBMITTED:
DATE:
SURVEY BY:
FIELD BOOK NO.
DESIGNED BY:
DRAWN BY:
SHEET NO. OF SHEETS
DWG. NO. Z0E08-0516

CADD DWG. FILE NO. : Z0E08.DWG

COHSTD.BDR

0 1 2 3 ORIGINAL SCALE IN INCHES FOR REDUCED PLANS

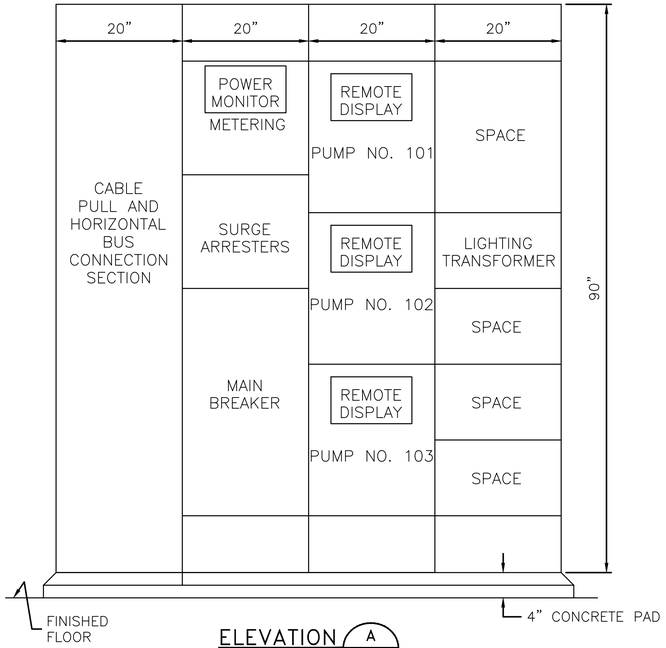

ELEVATION A Z0E13
(SEE NOTE B)

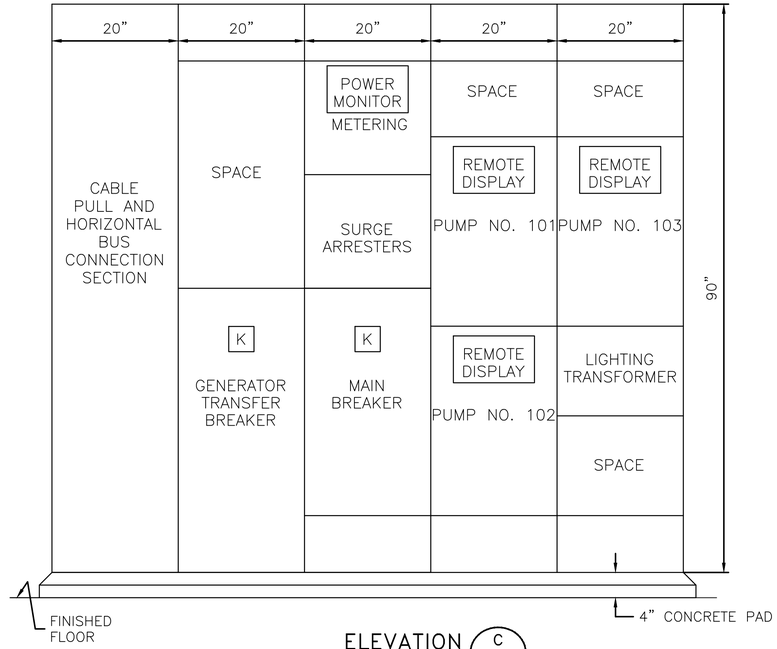

ELEVATION C Z0E13
(SEE NOTE B)

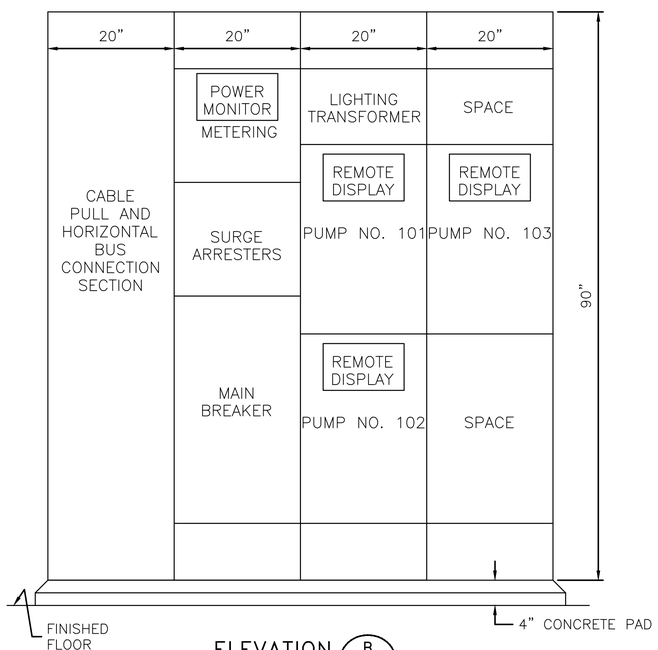

ELEVATION B Z0E13
(SEE NOTE B)

NOTES TO DESIGN ENGINEER:

A. THESE LIFT STATION DRAWINGS ARE CONSIDERED TO BE DESIGN GUIDELINES FOR THE CONSTRUCTION OF CITY OF HOUSTON WASTEWATER SUBMERSIBLE LIFT STATIONS. THEIR INTENDED USE IS AS A FRAMEWORK FOR THE CONTRACTED DESIGN ENGINEER IN DEVELOPING SPECIFIC LIFT STATION DESIGNS.

IT IS THE RESPONSIBILITY OF THE CONTRACTED DESIGN ENGINEER TO VERIFY THE COMPLETENESS AND ACCURACY OF THE INFORMATION HEREIN CONTAINED AND TO ADJUST ACCORDING TO PROJECT SPECIFIC REQUIREMENTS.

B. ELEVATIONS FOR SERVICES 400A AND ABOVE.

C. THE DESIGN ENGINEER SHALL INCORPORATE ONLY THE NECESSARY STANDARD GUIDELINE DRAWINGS AND DETAILS INTO HIS PROJECT CONTRACT DOCUMENTATION PACKAGE, AND SHALL ADJUST PAGE NUMBERS AND CROSS REFERENCING ACCORDINGLY.

D. THE DESIGN ENGINEER SHALL CONSULT THE CITY OF HOUSTON DESIGN GUIDELINES MANUAL, THE ENGINEERING DESIGN MANUAL, AND THE MASTER SPECIFICATIONS FOR FURTHER INSTRUCTIONS AND INFORMATION PERTINENT TO THESE STANDARD DESIGN GUIDELINE DRAWINGS.

E. THE DESIGN ENGINEER SHALL REMOVE THESE NOTES, ALL REFERENCES TO THESE NOTES, AND ANY OTHER EXTRANEOUS INFORMATION FROM THE DESIGN GUIDELINE DRAWINGS. DESIGN ENGINEER SHALL PROVIDE ANY NOTES OR OTHER APPROPRIATE INFORMATION NECESSARY TO COMPLETE THE LIFT STATION DESIGN.

3 PUMP (INDOOR/OUTDOOR)
MCC ELEVATIONS

PROJECT NO.
R-000265-0XXX-X

TITLE
CITY OF HOUSTON
DESIGN GUIDELINE DRAWINGS
FOR SUBMERSIBLE LIFT STATIONS

CITY OF HOUSTON
DEPARTMENT OF PUBLIC WORKS AND ENGINEERING
ENGINEERING AND CONSTRUCTION

DESIGN ENGINEER TO INCLUDE COH STANDARD TITLE BLOCK ON ALL DRAWINGS, SEE STANDARD TITLE BLOCK DETAIL ON SHEET Z0C0X

REV. NO.	DESCRIPTION	APP'D	DATE

SCALE: NONE
SUBMITTED:
DATE:
SURVEY BY:
FIELD BOOK NO.
DESIGNED BY:
DRAWN BY:
SHEET NO. OF SHEETS
DWG. NO.
Z0E13-0516

CADD DWG. FILE NO. :
Z0E13.DWG

COHSTD.BDR

0 1 2 3 ORIGINAL SCALE IN INCHES FOR REDUCED PLANS

	DESCRIPTION	SERVICE		ROUTING			CONDUIT & WIRE SIZE
		VOLTAGE	AMPS OR HP	FROM	TO	VIA	
A	MAIN BONDING JUMPER	--	--	PANEL NEUTRAL	PANEL GROUND	--	
B	EQUIPMENT BONDING JUMPER	--	--	UTILITY PANEL GROUND	PANEL ENCLOSURE	--	
C	GROUNDED SERVICE CONDUCTOR	--	--	GROUNDING ELECTRODE NS SERVICE	MAIN SERVICE FUSED DISCONNECT	--	
100	SERVICE ENTRANCE	480V	VARIES	SERVICE	METER DISCONNECT		
100A	MCC SERVICE POWER	480V	VARIES	MANUAL TRANSFER SWITCH	MCC OR POWER PANEL	--	***SEE NOTE G***
100B	NORMAL/EMERRGENCY POWER STATUS	24VDC	--	MANUAL TRANSFER SWITCH	CONTROL PANEL	--	***SEE NOTE G***
100C	EMERGENCY POWER	480V	VARIES	GENERATOR DISCONNECT	PORTABLE GENERATOR	CAPPED CONDUITS	***SEE NOTE G***
*100	SERVICE ENTRANCE	480V	VARIES	SERVICE	CT CAN	--	***SEE NOTE G***
*100A	SERVICE POWER	480V	VARIES	SERVICE DISCONNECT	MAIN BREAKER IN MCC	--	***SEE NOTE G***
*100B	EMERGENCY POWER	480V	VARIES	GENERATOR DISCONNECT	GENERATOR TRANSFER SWITCH	--	***SEE NOTE G***
*100C	EMERGENCY POWER	480V	VARIES	GENERATOR DISCONNECT	PORTABLE GENERATOR	CAPPED CONDUITS	***SEE NOTE G***
101	GROUND ELECTRODE CONDUCTOR	--	--	POWER PANEL	GROUND FIELD	--	
102	GROUND ELECTRODE CONDUCTOR	--	--	BUILDING STEEL	GROUND FIELD	--	
103	LIGHTNING DOWN LEAD	--	--	LIGHTNING ARRESTOR	LIGHTNING GROUND FIELD	--	
104	GROUND ELECTRODE CONDUCTOR	--	--	CONTROL PANEL OR MOTOR CONTROL CENTER	GROUND FIELD	--	
105	COMMUNICATION	--	--	UTILITY SERVICE	PANEL PPU	--	
200	PUMP NO. 101 POWER	480V	***HP AS NOTED***	PUMP NO. 101	PUMP NO. 101 JUNCTION BOX	--	***SEE NOTE E***
201	PUMP NO. 101 CONTROLS	120V	--	PUMP NO. 101	PUMP NO. 101 JUNCTION BOX	--	***SEE NOTE E***
202	PUMP NO. 101 POWER	480V	***HP AS NOTED***	PUMP NO. 101 JUNCTION BOX	PUMP STARTER	--	
203	COMBINED PUMP CONTROLS	120V	--	PUMP NO. 101 JUNCTION BOX	PUMP STARTER	--	***COMBINE 200 & 300 TAG WIRING***
205	PUMP NO. 101 CONTROLS	120V	--	STARTER IN MOTOR CONTROL CENTER	CONTROL PANEL	--	
206	PUMP NO. 101 CAPACITORS	480V	***TBD***	PUMP NO. 101 MOTOR STARTER	POWER FACTOR CORRECTION CAPACITOR	--	
300	PUMP NO. 102 POWER	480V	***HP AS NOTED***	PUMP NO. 102	PUMP NO. 102 JUNCTION BOX	--	***SEE NOTE E***
301	PUMP NO. 102 CONTROLS	120V	--	PUMP NO. 102	PUMP NO. 102 JUNCTION BOX	--	***SEE NOTE E***
302	PUMP NO. 102 POWER	480V	***HP AS NOTED***	PUMP NO. 102 JUNCTION BOX	PUMP STARTER	--	
305	PUMP NO. 102 CONTROLS	120V	--	STARTER IN MOTOR CONTROL CENTER	CONTROL PANEL	--	
306	PUMP NO. 102 CAPACITOR	480V	***TBD***	PUMP NO. 102 MOTOR STARTER	POWER FACTOR CORRECTION CAPACITOR	--	
400	PUMP NO. 103 POWER	480V	***HP AS NOTED***	PUMP NO. 103	PUMP NO. 103 JUNCTION BOX	--	***SEE NOTE E***
401	PUMP NO. 103 CONTROLS	120V	--	PUMP NO. 103	PUMP NO. 103 JUNCTION BOX	--	***SEE NOTE E***
402	PUMP NO. 103 POWER	480V	***HP AS NOTED***	PUMP NO. 103 JUNCTION BOX	PUMP STARTER	--	
405	PUMP NO. 103 CONTROLS	120V	--	STARTER IN MOTOR CONTROL CENTER	CONTROL PANEL	--	
406	PUMP NO. 103 CAPACITOR	480V	***TBD***	PUMP NO. 103 MOTOR STARTER	POWER FACTOR CORRECTION CAPACITOR	--	
600	LIGHTING PANEL FEEDER	480V	--	MOTOR CONTROL CENTER	LIGHTING TRANSFORMER	--	
601	LIGHTING PANEL GROUND	--	--	LIGHTING PANEL	GROUND FIELD	--	
602	LIGHTING PANEL FEEDER	120/240V	--	LIGHTING TRANSFORMER	LIGHTING PANEL	--	
900	INTRUSION ALARM	24VDC	--	DOOR LIMIT SWITCH	CONTROL PANEL	--	
1000	LEVEL TRANSMITTER	24VDC	--	TRANSMITTER JUNCTION BOX	TRANSMITTER	--	***SEE NOTE E***
1001	LEVEL TRANSMITTER	24VDC	--	TRANSMITTER JUNCTION BOX	TRANSMITTER	--	***SEE NOTE E***
1002	COMBINED LEVEL TRANSMITTER	24VDC	--	CONTROL PANEL	TRANSMITTER	--	
1003	FLOAT SWITCH	24VDC	--	SUMP PUMP MOTOR STARTER	CONTROL PANEL	--	
1100	120VAC FOR RECEPTACLE	--	--	LIGHTING PANEL	RECEPTACLE NEXT TO LEVEL TRANSMITTER J-BOX	--	L11 (IND.) , 2#12 #12G, 1"C, L2 (OUTD.)
1101	SUMP PUMP POWER	120V	--	MOTOR STARTER	LIGHTING PANEL	--	L12 (IND.) , 2#12 #12G, 1"C, L12 (OUTD.)
1200	120VAC FOR RECEPTACLE	--	--	LIGHTING PANEL	RECEPTACLE NEXT TO PUMP NO. 102 J-BOX	--	L13 (IND.) , 2#12 #12G, 1"C, L4 (OUTD.)
1201	EXHAUST FAN	120V	--	MOTOR RATED SWITCH	LIGHTING PANEL	--	L3 (IND.) , 2#12 #12G, 1"C, L3 (OUTD.)

NOTES TO DESIGN ENGINEER:

A. THESE LIFT STATION DRAWINGS ARE CONSIDERED TO BE DESIGN GUIDELINES FOR THE CONSTRUCTION OF CITY OF HOUSTON WASTEWATER SUBMERSIBLE LIFT STATIONS. THEIR INTENDED USE IS AS A FRAMEWORK FOR THE CONTRACTED DESIGN ENGINEER IN DEVELOPING SPECIFIC LIFT STATION DESIGNS.

IT IS THE RESPONSIBILITY OF THE CONTRACTED DESIGN ENGINEER TO VERIFY THE COMPLETENESS AND ACCURACY OF THE INFORMATION HEREIN CONTAINED AND TO ADJUST ACCORDING TO PROJECT SPECIFIC REQUIREMENTS.

B. CONDUIT NUMBERS 102, 103, 206, 306, 406, 600, 601, 900, 1101 & 1201 ARE FOR USE AT LIFT STATIONS EQUIPPED WITH A CONTROL BUILDING.

C. WIRE, CABLE AND CONDUIT SIZES AND QUANTITIES ARE TO BE DETERMINED BY THE DESIGN ENGINEER PER SPECIFIC SITE REQUIREMENTS.

D. CONDUITS LABELED "FUTURE SPACE" ARE THOSE TO BE INSTALLED AND CAPPED IN FIELD.

E. THE DESIGN ENGINEER SHALL SIZE ANY CONDUIT REQUIRING A CSBE TYPE SEAL AT NO SMALLER THAN 2 1/2". CSBE SEALS ARE NOT MANUFACTURED SMALLER THAN 2 1/2".

F. NOT USED.

G. GENERATOR CONDUIT SHALL BE A MINIMUM OF 3" CONDUIT.

H. THE DESIGN ENGINEER SHALL INCORPORATE ONLY THE NECESSARY STANDARD GUIDELINE DRAWINGS AND DETAILS INTO HIS PROJECT CONTRACT DOCUMENTATION PACKAGE, AND SHALL ADJUST PAGE NUMBERS AND CROSS REFERENCING ACCORDINGLY.

I. THE DESIGN ENGINEER SHALL CONSULT THE CITY OF HOUSTON DESIGN GUIDELINES MANUAL, THE ENGINEERING DESIGN MANUAL, AND THE MASTER SPECIFICATIONS FOR FURTHER INSTRUCTIONS AND INFORMATION PERTINENT TO THESE STANDARD DESIGN GUIDELINE DRAWINGS.

J. THE DESIGN ENGINEER SHALL REMOVE THESE NOTES, ALL REFERENCES TO THESE NOTES, AND ANY OTHER EXTRANEOUS INFORMATION FROM THE DESIGN GUIDELINE DRAWINGS. DESIGN ENGINEER SHALL PROVIDE ANY NOTES OR OTHER APPROPRIATE INFORMATION NECESSARY TO COMPLETE THE LIFT STATION DESIGN.

NOTES:

1. CONDUITS LABELED "FUTURE SPACE" ARE TO BE INSTALLED AND CAPPED IN FIELD.
2. ANY CONDUIT REQUIRING A CSBE SEAL, SHALL BE A MINIMUM SIZE OF 2 1/2" PER CABLE.
3. ALL UNDERGROUND CONDUITS (SINGLE AND MULTI-RUN) TO BE ENCASED IN REINFORCED CONCRETE DUCTBANK.
4. "*" FOR 500AMP AND ABOVE ELECTRIC SERVICE.

3 PUMP (INDOOR/OUTDOOR)
CONDUIT SCHEDULE
FOR 480 VOLT

PROJECT NO.
R-000265-0XXX-X

TITLE
CITY OF HOUSTON
DESIGN GUIDELINE DRAWINGS
FOR SUBMERSIBLE LIFT STATIONS

CITY OF HOUSTON
DEPARTMENT OF PUBLIC WORKS AND ENGINEERING
ENGINEERING AND CONSTRUCTION

DESIGN ENGINEER TO INCLUDE COH STANDARD TITLE BLOCK ON ALL DRAWINGS, SEE STANDARD TITLE BLOCK DETAIL ON SHEET Z0C0X

REV. NO.	DESCRIPTION	APP'D	DATE

SCALE: NONE
SUBMITTED:
DATE:
SURVEY BY:
FIELD BOOK NO.
DESIGNED BY:
DRAWN BY:
SHEET NO. OF SHEETS
DWG. NO.
Z0E21-0516

CADD DWG. FILE NO. :
Z0E21.DWG

COHSTD.BDR

0 1 2 3 ORIGINAL SCALE IN INCHES FOR REDUCED PLANS

ITEM	CIRCUIT	DESCRIPTION	RATINGS FOR PUMP SIZES INDICATED			
			3 @ 20HP	3 @ 25HP	3 @ 30HP	3 @ 40HP
I	--	MAIN DISCONNECT SWITCH	3P, 4W SN	3P, 4W SN	3P, 4W SN	3P, 4W SN
		OPERATING VOLTAGE	480V	480V	480V	480V
		CURRENT RATING	400A	400A	400A	600A
		CURRENT LIMITING FUSES TYPE & SIZE	CLASS J 250A	CLASS J 300A	CLASS J 350A	CLASS J 450A
II FOR MCC	--	MOTOR CONTROL CENTER MAIN BUS				
		OPERATING VOLTAGE	480V	480V	480V	480V
		CURRENT RATING	600A	600A	600A	600A
		NEUTRAL SIZE & TYPE	300A LUG	300A LUG	300A LUG	300A LUG
		BUS BRACING	65KA SYM	65KA SYM	65KA SYM	65KA SYM
III	1G (SEE NOTE 1)	MAIN BREAKER				
		3 POLE – TYPE	MOLDED CASE	MOLDED CASE	MOLDED CASE	MOLDED CASE
		MOUNTING	FIXED	FIXED	FIXED	FIXED
		OPERATING VOLTAGE	480V	480V	480V	480V
		FRAME SIZE	400A	400A	400A	600A
		TRIP SETTING	250A	300A	350A	450A
		INTERRUPT CAPACITY	42KA SYM	42KA SYM	42KA SYM	42KA SYM
		OPTIONS	NONE	NONE	NONE	NONE
IV	2 3 4	PUMP MOTOR STARTERS				
		QUANTITY	3	3	3	3
		MOUNTING	FIXED	FIXED	FIXED	FIXED
		SHORT CIRCUIT PROTECTION				
		3 POLE – TYPE	MCP	MCP	MCP	MCP
		OPERATING VOLTAGE	480V	480V	480V	480V
		FRAME SIZE	50A	70A	100A	150A
		TRIP SETTING	FIELD ADJ	FIELD ADJ	FIELD ADJ	FIELD ADJ
		INTERRUPT CAPACITY	100KA SYM	100KA SYM	100KA SYM	100KA SYM
		MOTOR STARTING CONTACTOR				
		3 POLE – TYPE	AIR	AIR	AIR	AIR
		OPERATING VOLTAGE	480V	480V	480V	480V
		SIZE/CURRENT RATING	NEMA 2	NEMA 2	NEMA 3	NEMA 3
		OVERLOAD PROTECTION TYPE	SOLID STATE MOR	SOLID STATE MOR	SOLID STATE MOR	SOLID STATE MOR
		CT RATIO	100 : 5	100 : 5	100 : 5	200 : 5
V	6	LIGHTING TRANSFORMER FEEDER BREAKER				
		NO. OF POLES	2	2	2	2
		TYPE	MOLDED CASE	MOLDED CASE	MOLDED CASE	MOLDED CASE
		OPERATING VOLTAGE	480V	480V	480V	480V
		FRAME SIZE	150A	150A	150A	150A
		TRIP SETTING	50A	50A	50A	50A
		INTERRUPT CAPACITY	42KA SYM	42KA SYM	42KA SYM	42KA SYM
VII	--	MANUAL TRANSFER SWITCH	3P, 4W SN	3P, 4W SN	3P, 4W SN	3P, 4W SN
		OPERATING VOLTAGE	600V	600V	600V	600V
		CURRENT RATING	400A	400A	400A	600A
VIII	--	GENERATOR FUSED DISCONNECT SWITCH	3P, 4W SN	3P, 4W SN	3P, 4W SN	3P, 4W SN
		OPERATING VOLTAGE	600V	600V	600V	600V
		CURRENT RATING	400A	400A	400A	600A
		CURRENT LIMITING FUSES TYPE & SIZE	CLASS J 250A	CLASS J 300A	CLASS J 350A	CLASS J 450A
IX	1 (SEE NOTE 2, 3)	GENERATOR TRANSFER SWITCH				
		3 POLE – TYPE	MOLDED CASE	MOLDED CASE	MOLDED CASE	INSULATED CASE
		MOUNTING	FIXED	FIXED	FIXED	FIXED
		OPERATING VOLTAGE	480V	480V	480V	480V
		FRAME SIZE	400A	400A	400A	800A
		TRIP SETTING	250A	300A	350A	450A
		INTERRUPT CAPACITY	42KA SYM	42KA SYM	42KA SYM	42KA SYM
		OPTIONS	NONE	NONE	NONE	NONE

MOTOR CONTROL CENTER ELEVATION LETTER		A,B	A,B	C	C
INDOOR CONTROL PANEL WIDTH (MIN)		48"	48"	48"	48"
MINIMUM CONTROL BUILDING DIMENSIONS	INSIDE LENGTH	8'-0"	8'-0"	10'-0"	10'-0"
	OUTSIDE LENGTH	9'-6"	9'-6"	12'-0"	12'-0"

NOTES TO DESIGN ENGINEER:

A. THESE LIFT STATION DRAWINGS ARE CONSIDERED TO BE DESIGN GUIDELINES FOR THE CONSTRUCTION OF CITY OF HOUSTON WASTEWATER SUBMERSIBLE LIFT STATIONS. THEIR INTENDED USE IS AS A FRAMEWORK FOR THE CONTRACTED DESIGN ENGINEER IN DEVELOPING SPECIFIC LIFT STATION DESIGNS.

IT IS THE RESPONSIBILITY OF THE CONTRACTED DESIGN ENGINEER TO VERIFY THE COMPLETENESS AND ACCURACY OF THE INFORMATION HEREIN CONTAINED AND TO ADJUST ACCORDING TO PROJECT SPECIFIC REQUIREMENTS.

B. TABLES NOTED ARE FOR USE WITH CONTROL BUILDING ONLY. DESIGN ENGINEER SHALL SELECT APPROPRIATE DIMENSIONS, REVISE THE CONTROL BUILDING AND CONTROL PANEL DRAWINGS AND DELETE THIS INFORMATION FROM THE DEVICE SCHEDULE.

C. TO MAINTAIN INDICATED CONTROL BUILDING SIZE, DESIGN ENGINEER MUST LOCATE THE TRANSFORMER AND LIGHTING PANEL ON BUILDING WALL ADJACENT TO THE MCC; OR BUILDING SIZE MUST BE INCREASED TO ACCOMMODATE TYPICAL AND ALTERNATE LOCATIONS OF TRANSFORMER AND LIGHTING PANEL.

D. THE DESIGN ENGINEER SHALL INCORPORATE ONLY THE NECESSARY STANDARD GUIDELINE DRAWINGS AND DETAILS INTO HIS PROJECT CONTRACT DOCUMENTATION PACKAGE, AND SHALL ADJUST PAGE NUMBERS AND CROSS REFERENCING ACCORDINGLY.

E. THE DESIGN ENGINEER SHALL CONSULT THE CITY OF HOUSTON DESIGN GUIDELINES MANUAL, THE ENGINEERING DESIGN MANUAL, AND THE MASTER SPECIFICATIONS FOR FURTHER INSTRUCTIONS AND INFORMATION PERTINENT TO THESE STANDARD DESIGN GUIDELINE DRAWINGS.

F. THE DESIGN ENGINEER SHALL REMOVE THESE NOTES, ALL REFERENCES TO THESE NOTES, AND ANY OTHER EXTRANEOUS INFORMATION FROM THE DESIGN GUIDELINE DRAWINGS. DESIGN ENGINEER SHALL PROVIDE ANY NOTES OR OTHER APPROPRIATE INFORMATION NECESSARY TO COMPLETE THE LIFT STATION DESIGN.

NOTES:
1. PROVIDE PER MANUFACTURER'S REQUIREMENTS.
2. PROVIDE TRIP SETTING BASED ON GENERATOR SIZE.
3. SWITCH UNIT IN MCC.

3 PUMP (INDOOR/OUTDOOR)
DEVICE RATING SCHEDULE

PROJECT NO. R-000265-0XXX-X

TITLE CITY OF HOUSTON
DESIGN GUIDELINE DRAWINGS
FOR SUBMERSIBLE LIFT STATIONS

CITY OF HOUSTON
DEPARTMENT OF PUBLIC WORKS AND ENGINEERING
ENGINEERING AND CONSTRUCTION

DESIGN ENGINEER TO INCLUDE COH STANDARD TITLE BLOCK ON ALL DRAWINGS, SEE STANDARD TITLE BLOCK DETAIL ON SHEET Z0C0X

REV. NO.	DESCRIPTION	APP'D	DATE

SCALE: NONE
SUBMITTED:
DATE:
SURVEY BY:
FIELD BOOK NO.
DESIGNED BY:
DRAWN BY:
SHEET NO. OF SHEETS
DWG. NO. Z0E42-0516

CADD DWG. FILE NO. : Z0E42.DWG

COHSTD.BDR

0 1 2 3 ORIGINAL SCALE IN INCHES FOR REDUCED PLANS